24A657Z055G1

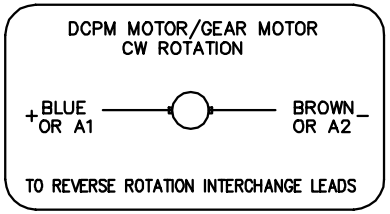

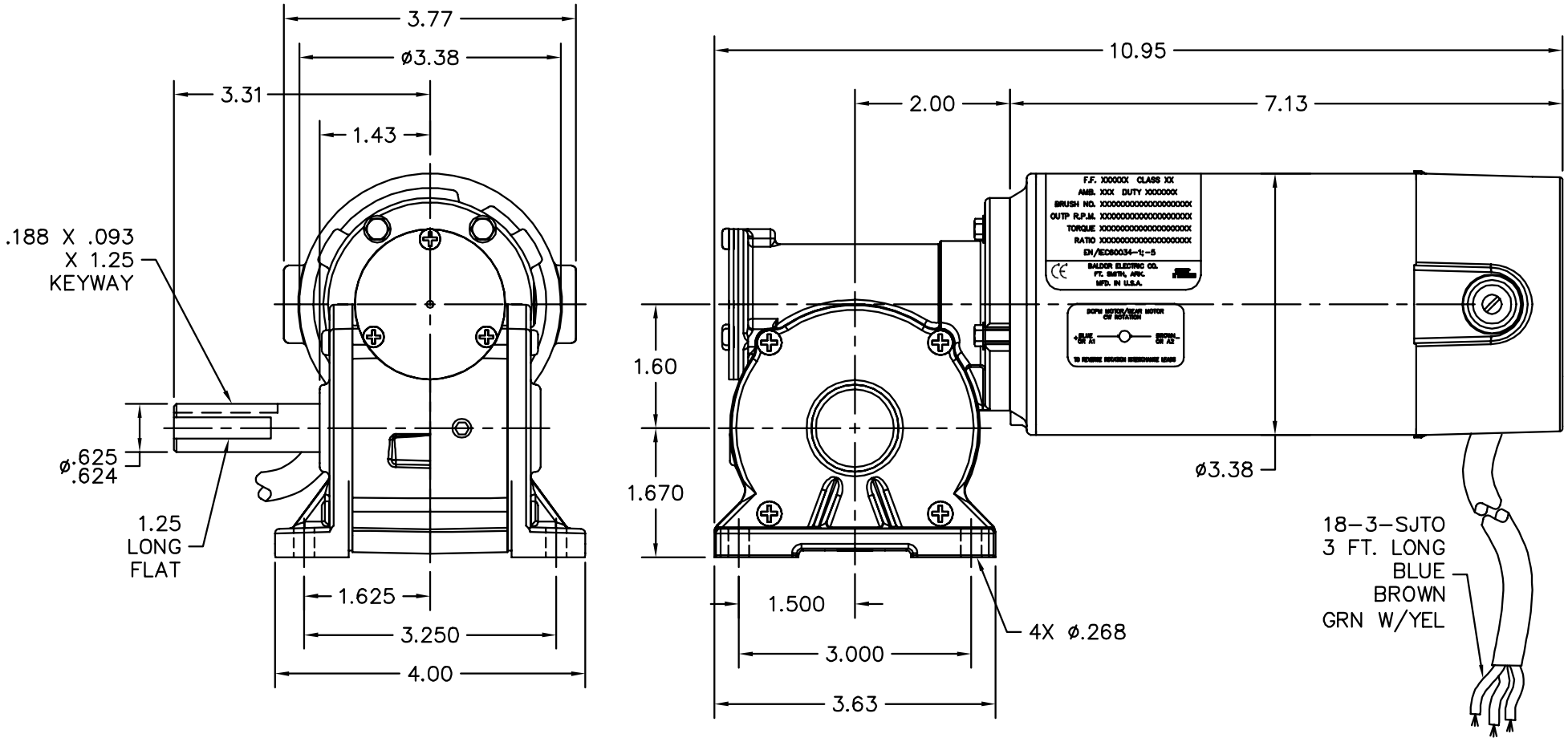

CUSTOMER IS RESPONSIBLE FOR DETERMINING THAT BALDOR'S PRODUCT WILL PERFORM SUITABLY IN THE INTENDED APPLICATION.

REV. DESC: CHANGE OUTPUT SHAFT TOL TO .625/.624			BALDOR
REV. LTR: A	VERSION: 01	TDR: 000000718348	
FILE: \CKA\00033\579		REVISED: 10:19:19 10/27/2011	LY,24DC K DOM TENV GP .625 KEY & FLAT (GP12530)
MTL: –		BY: CKJASWO	SH 1 of 2

24A657Z055G1