SHEET 1 | REV 7 | 52A106661 | DRAWING NO. | SIZE A

THIRD ANGLE PROJECTION

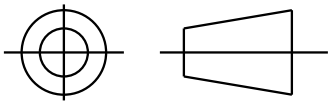

REVISIONS			
REV.	DESCRIPTION	DATE	APPROVED
5	ADDED PT#5, UPDATED SHELL VENTS	01/14/94	M.D.PAPE
6	ADDED PART #6.	11/09/95	M.D.PAPE
7	CHG TO RBC FORMAT PER IS05-1777	02/13/06	SUDHA

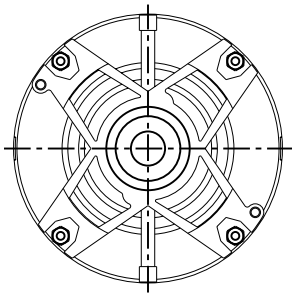

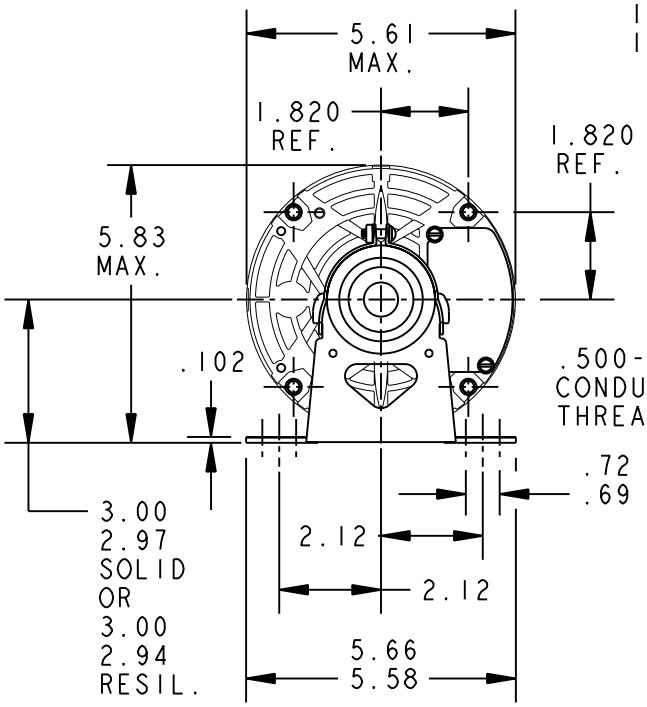

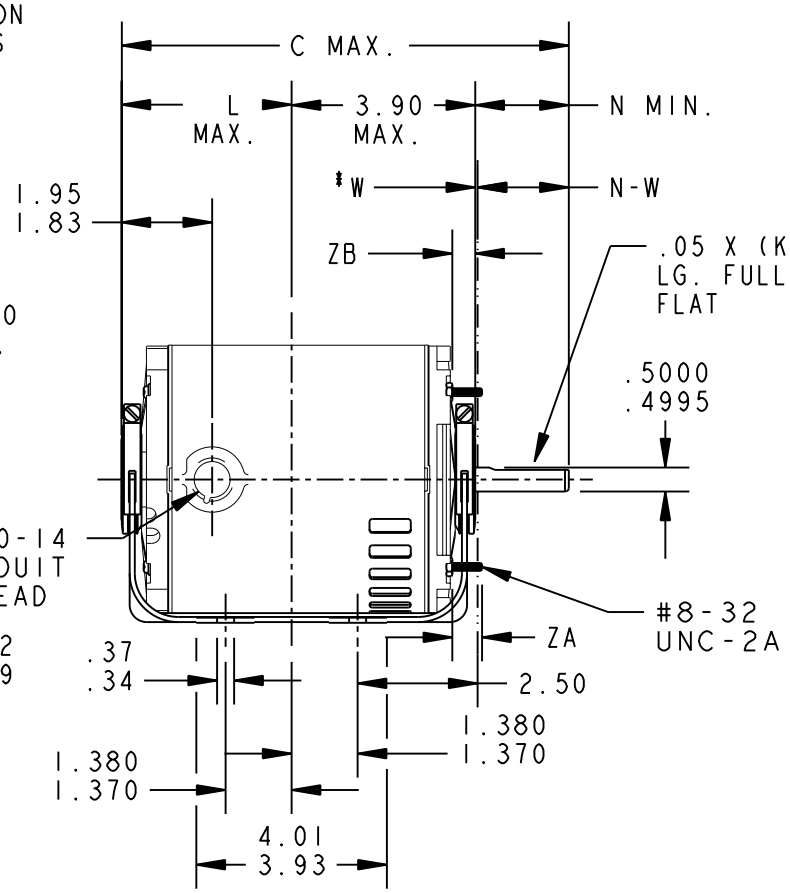

P	TYPE	GE SIZE	NEMA FR	C	K	L	N	N-W	ZB	ZA
6	KH	35	48	9.56	1.16	4.22	1.50	1.63/1.41	.55/.52	.50
5	KH	33	48Z	9.93	1.91	3.84	2.25	2.38/2.16	.55/.52	.90
4	KH	32	48	8.93	1.16	3.59	1.50	1.63/1.41	.55/.52	.62
3	KH	36	48	9.99	1.16	4.65	1.50	1.63/1.41	.55/.52	.50
2	KH	32	48Z	9.94	1.91	3.59	2.25	2.38/2.16	.55/.52	.62
1	KH	32	48Z	9.32	1.54	3.59	1.88	2.01/1.79	.55/.52	.62

*W IS A CLEARNCE DUE TO VARIATION IN PARTS AND ASSEMBLY.

SIGNATURES		DATE
MODEL	D.A.BAESKE	07/05/88
DETAIL	.	.
CHECKED	.	.
ENGRG	.	.
MFG	.	.
QUALITY	.	.
ISSUED	B.L.J.	06/04/92

SOLID MODEL: 52A106661

FOR ADDITIONAL INFO REFER TO:
APPLIED PRACTICES .
DIMENSIONS ARE IN INCHES
MATERIAL .

REGAL-BELOIT CORPORATION

TITLE

OUTLINE

FORM N - GENERAL PURPOSE MOTOR - DRIP PROOF - SOLID OR RESIL. BASE - BALL OR SLEEVE BEARING

SIZE A | DRAWING 52A106661 | REV 7

SCALE: 0.250 | REF. No: . | SHEET 1 OF 1