100116

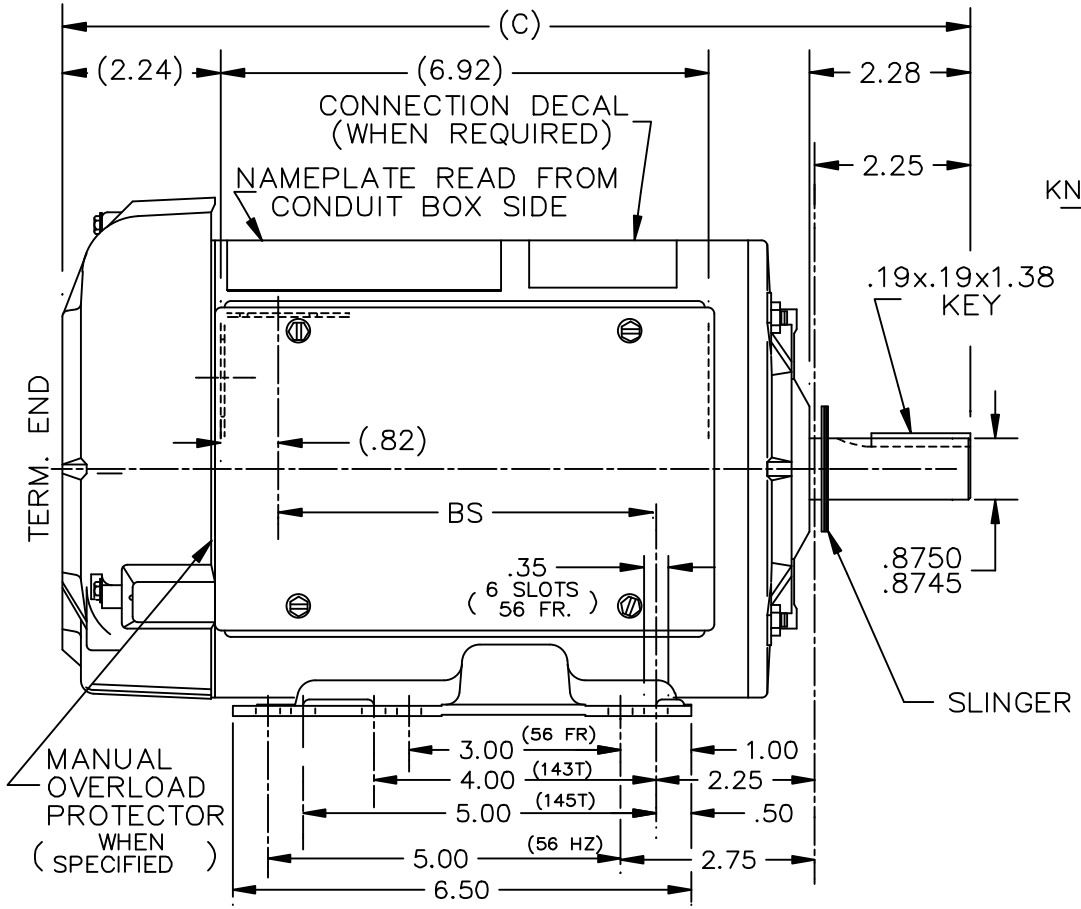


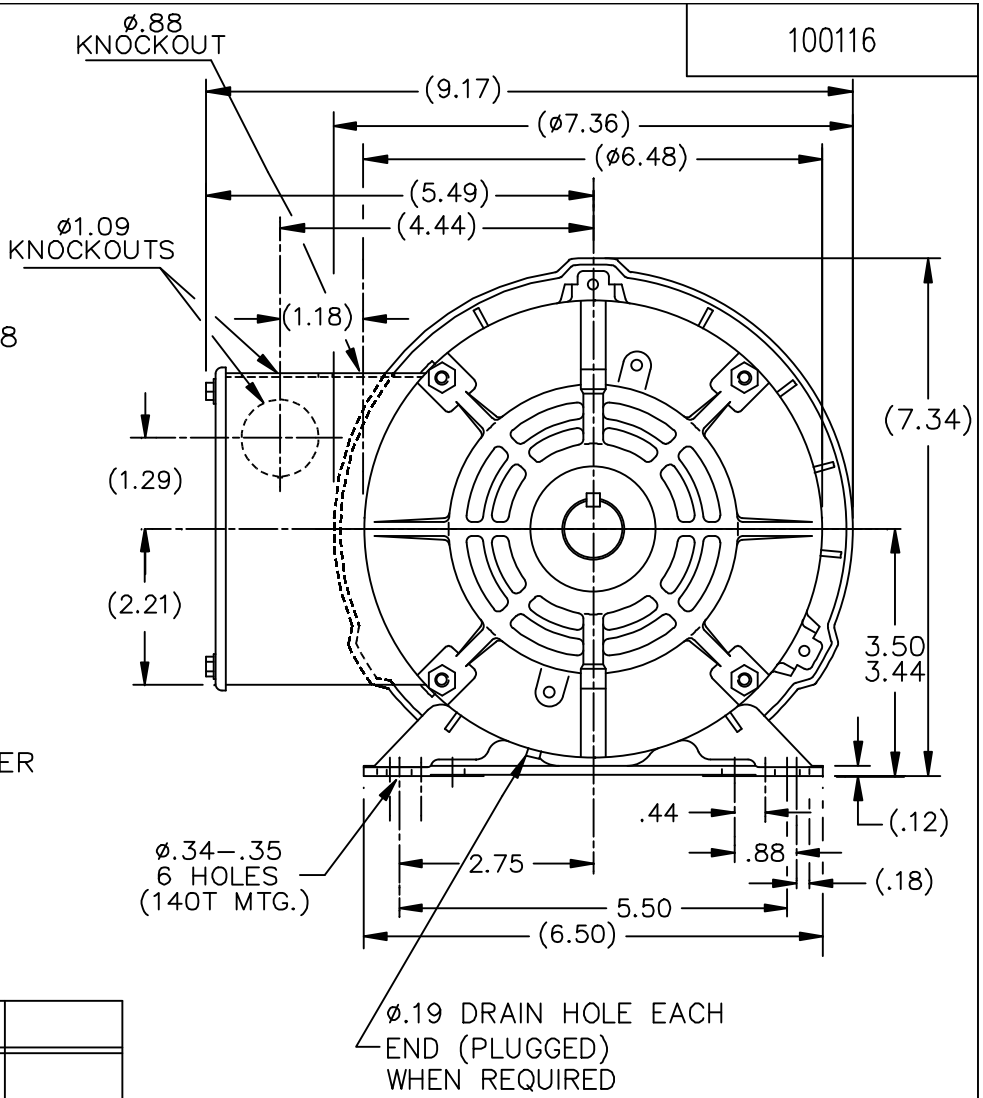


| DASH | FR. | C | BS | | DASH | FR. | C | BS | |
|---|---|---|---|---|---|---|---|---|---|
| | | | | | 806 | 140T/56HZ | 13.37 | 5.82 | |
| | | | | | 856 | " | 13.87 | 6.32 | |
| | | | | | 906 | " | 14.37 | 6.82 | |
| 756 | 140T/56HZ | 12.87 | 5.32 | | 956 | " | 14.87 | 7.32 | |

| NO. | REVISION | BY & DATE | CHK |
|---|---|---|---|
| 07 | ADDED DRAIN HOLE NOTE PER ECN#24221 | PN 4/26/2012 | SVL |
| 06 | ADDED HEIGHT DIMENSION (7.34) | RJW 09-12-2005 | ML |
| 05 | ADDED CONN DECAL CN13879 | KJC 03-26-2003 | ML |
| 04 | REDRAWN ON CADD | RM 08-12-1991 | |

TOLERANCES UNLESS SPECIFIED

| | DEC. | INCHES |
|---|---|---|
| | .X | ±.1 |
| | .XX | ±.03 |
| | .XXX | ±.005 |
| | .XXXX | ±.0005 |
| ANG | | ±7'30" |

MARATHON ELECTRIC

TITLE OUTLINE
140 FR. 56 HZ – TEFC 1ø – BB

MAT'L.

FINISH

CAD FILE 100116

RFP

DIST WP

| | | |
|---|---|---|
| DRAWN | RM | 08-12-1991 |
| CHK | ML | 08-12-1991 |
| APPD | GK | 08-12-1991 |
| SCALE | 1=2.75 | |
| REF | | |
| FMF | | |
| PREV | | |

| SIZE | DRAWING NO. | PAGE OF | REV. |
|---|---|---|---|
| A | 100116 | | 07 |

THIS DRAWING IN DESIGN AND DETAIL IS OUR PROPERTY AND MUST NOT BE USED EXCEPT IN CONNECTION WITH OUR WORK ALL RIGHTS OF DESIGN AND INVENTION ARE RESERVED
THIS IS AN ELECTRONICALLY GENERATED DOCUMENT – DO NOT SCALE THIS PRINT