104095

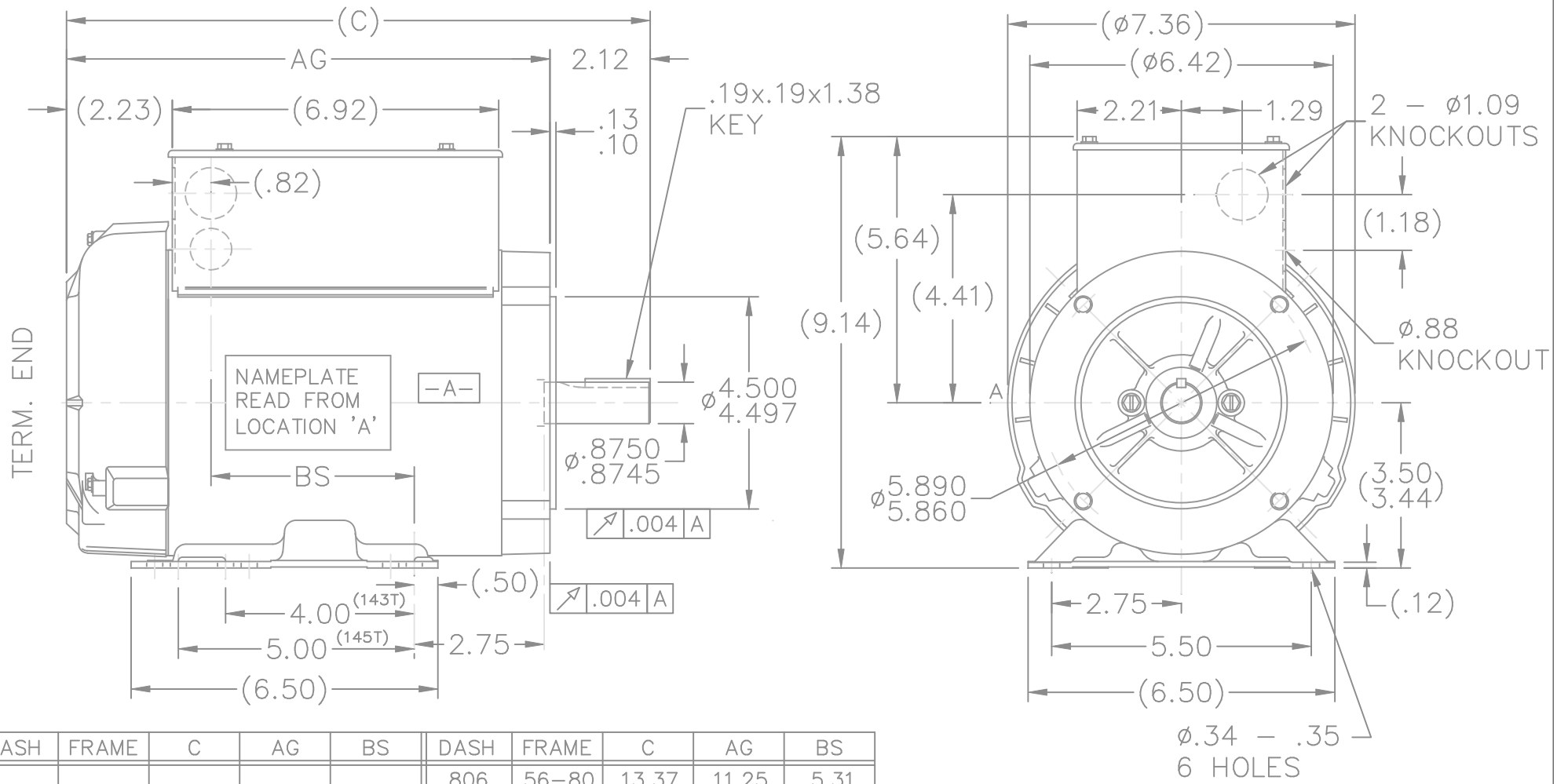

DASH	FRAME	C	AG	BS	DASH	FRAME	C	AG	BS
					806	56–80	13.37	11.25	5.31
					856	56–85	13.87	11.75	5.81
706	56–70	12.37	10.25	4.31	906	56–90	14.37	12.25	6.31
756	56–75	12.87	10.75	4.81	956	56–95	14.87	12.75	6.81

NO.	REVISION	BY & DATE	CHK
3	UPDATED DRAWING	RJW 03-28-2007	
2	REDRAWN IN AUTOCAD	TAT 06-24-2005	DRS
1	NEW DRAWING 4368156	BLR 02-23-1996	

TOLERANCES UNLESS SPECIFIED

DEC.	INCHES
.X	±.1
.XX	±.03
.XXX	±.005
.XXXX	±.0005
ANG	±7'30"

MARATHON ELECTRIC

TITLE OUTLINE

MAT'L.

FINISH

CAD FILE 104095

RFP

DIST WP

DRAWN	BLR 02-21-1996
CHK	ML 02-23-1996
APPD	SAT 02-23-1996
SCALE	5=16
REF	
FMF	
PREV	

SIZE	DRAWING NO.	PAGE OF	REV.
A	104095		3

THIS DRAWING IN DESIGN AND DETAIL IS OUR PROPERTY AND MUST NOT BE USED EXCEPT IN CONNECTION WITH OUR WORK ALL RIGHTS OF DESIGN AND INVENTION ARE RESERVED
THIS IS AN ELECTRONICALLY GENERATED DOCUMENT – DO NOT SCALE THIS PRINT

9/27/2008 8:32:59 AM