104585

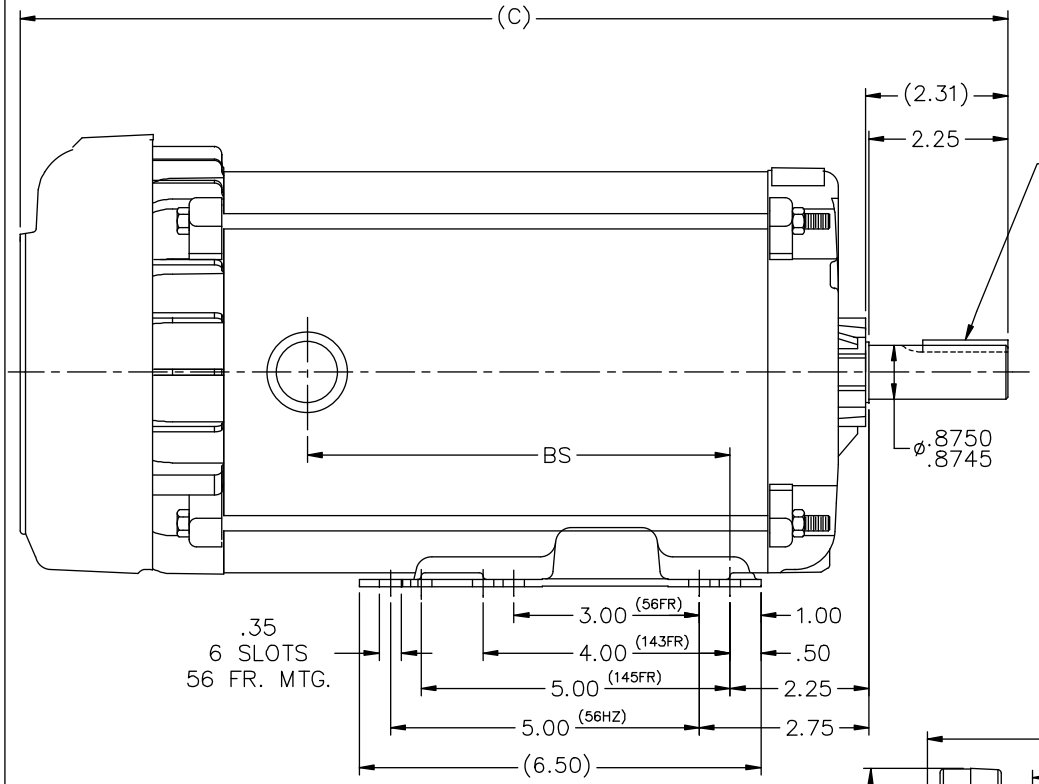

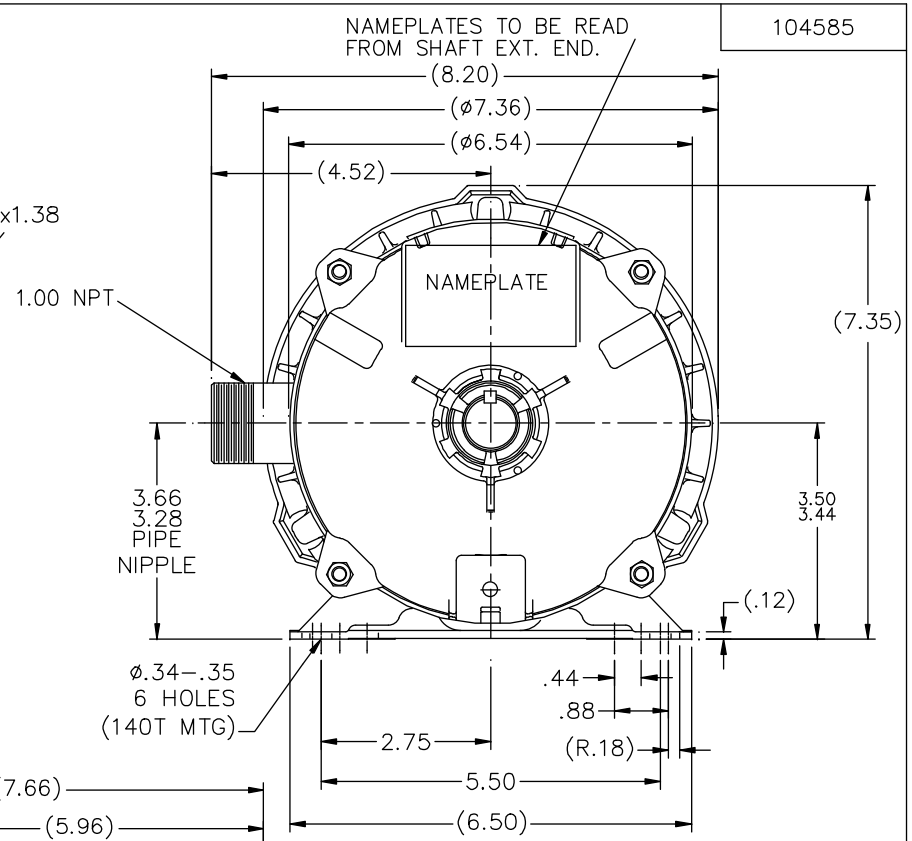

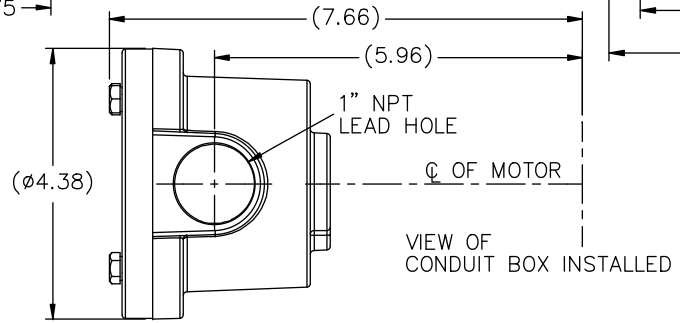

CONDUIT BOX NEEDED FOR MODELS GREATER THAN $1\frac{1}{2}$ H.P.

DASH	(C)	BS			
681	14.00	4.84			
731	14.50	5.34			
781	15.00	5.84			
831	15.50	6.34			
881	16.00	6.84	SHOWN		
931	16.50	7.34			
981	17.00	7.84			

NO.	REVISION	BY & DATE	CHK
3	REVISED C'BOX PER CN40784A	JJB 02/23/2007	ML
2	REDRAWN IN AUTOCAD, REMOVED –631 CN 46098	MJK 06/17/2005	
1	NEW DRAWING MU 24921	BLR 05-12-1999	

TOLERANCES UNLESS SPECIFIED

DEC.	INCHES
.X	±.1
.XX	±.03
.XXX	±.005
.XXXX	±.0005
ANG	±7'30"

MARATHON ELECTRIC

TITLE OUTLINE
140 FR. – EXP. PR. – TEFC – 1ø & 3ø

MAT'L.
FINISH
CAD FILE 104585

DRAWN BLR 05-10-1999
CHK ML 05-11-1999
APPD JM 05-12-1999
SCALE 1=2
REF
FMF
PREV

RFP
DIST WP

SIZE B
DRAWING NO. 104585
PAGE OF
REV. 3

THIS DRAWING IN DESIGN AND DETAIL IS OUR PROPERTY AND MUST NOT BE USED EXCEPT IN CONNECTION WITH OUR WORK ALL RIGHTS OF DESIGN AND INVENTION ARE RESERVED
THIS IS AN ELECTRONICALLY GENERATED DOCUMENT – DO NOT SCALE THIS PRINT

10/17/2013 1:49:35 AM - Converted by Connexus