37LYH885

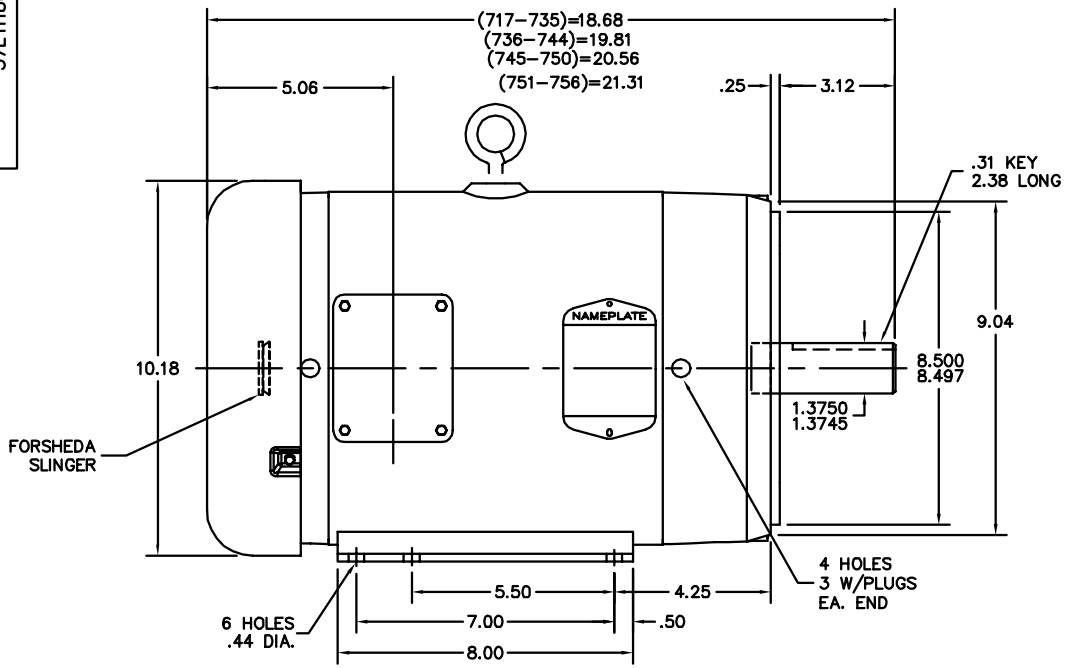

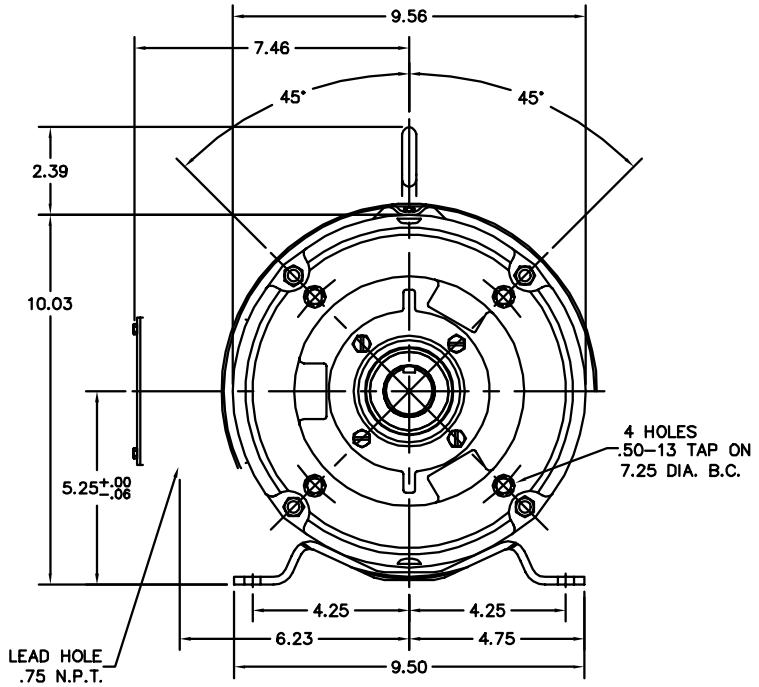

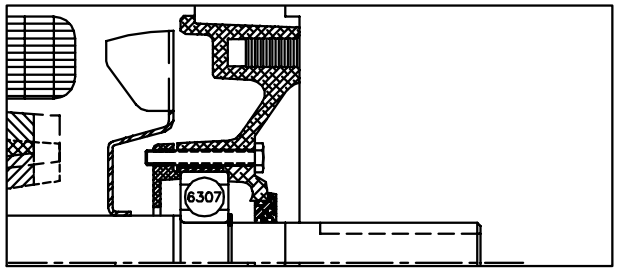

PULLEY END SECTION

CUSTOMER IS RESPONSIBLE FOR DETERMINING THAT BALDOR'S PRODUCT WILL PERFORM SUITABLY IN THE INTENDED APPLICATION.

REV. DESC: REPLACE HA1005A02 WITH HW4600B74			BALDOR
REV. LTR: C	VERSION: 03	TDR: 000000783785	HORZ 213–5TC TEFC 37M WD2 (PAINT FREE) INVERTER RAISED LTR
FILE: \AAA\00093\295	REVISED: 03:16:17 05/03/2013	BY: ENCARJO	SH 1 of 1
MTL: –			

37LYH885