37LYJ642

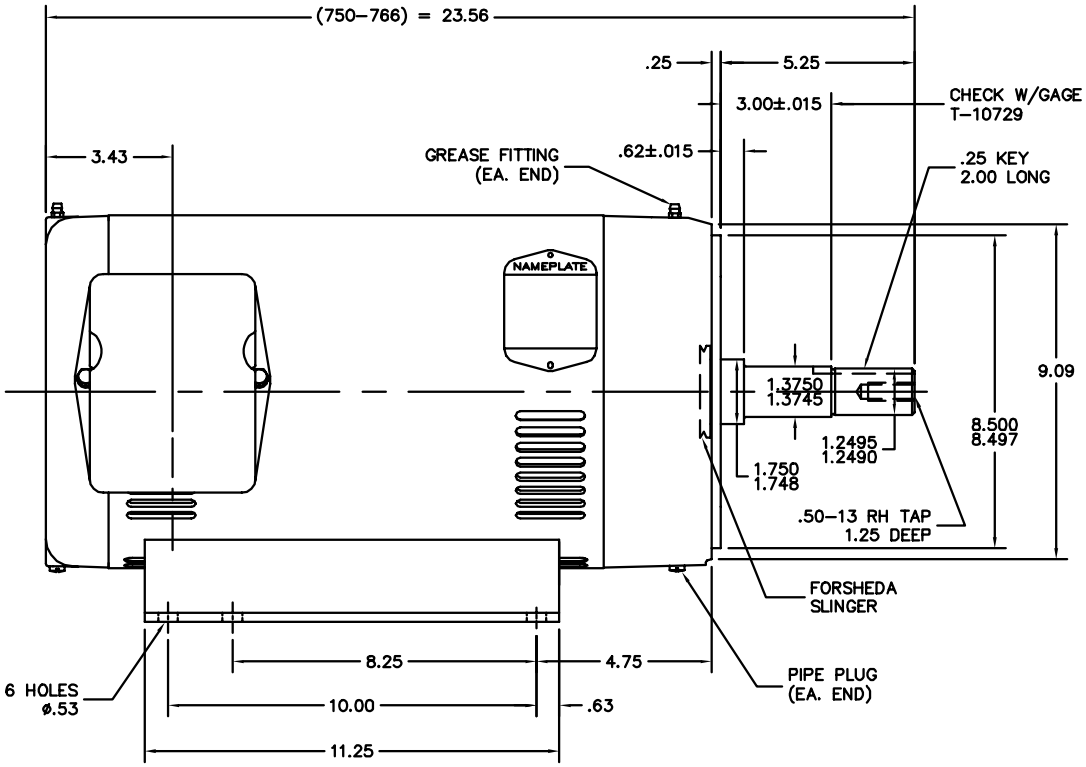

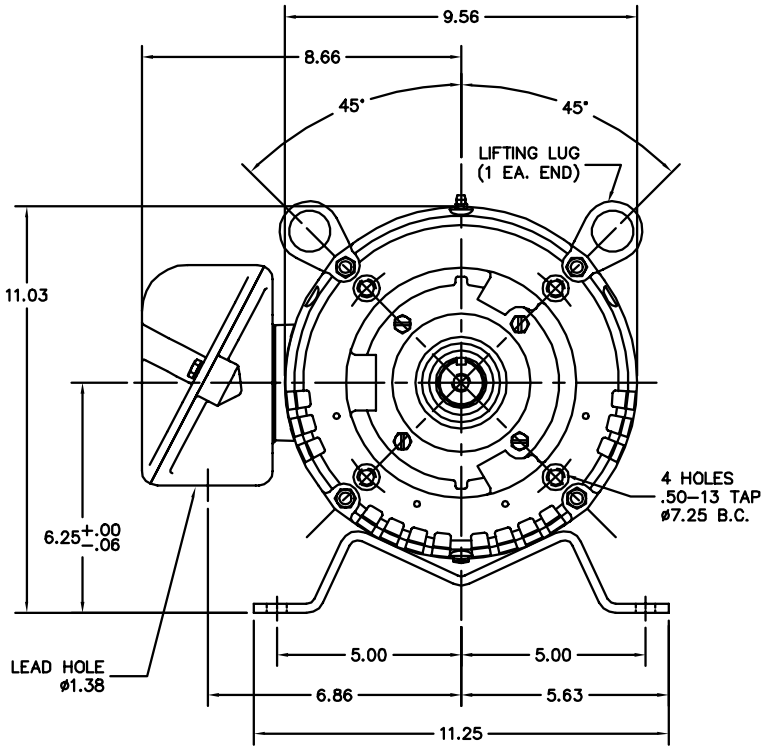

CUSTOMER IS RESPONSIBLE FOR DETERMINING THAT MOTOR PERFORMANCE IS SUITABLE IN THE APPLICATION.

REV. DESC: NEW		
REV. LTR: –	VERSION: 00	TDR: 000000402948
FILE: \AAA\00138\808	REVISED: 14:54:27 07/26/2006	BY: ENSTEK0
MTL: –		

BALDOR ELECTRIC Co.

HORZ 254–6JM OPSB M 09 KO, SCREENS (2.188 DIA ROTOR)

37LYJ642