B-XGIBISSIJ

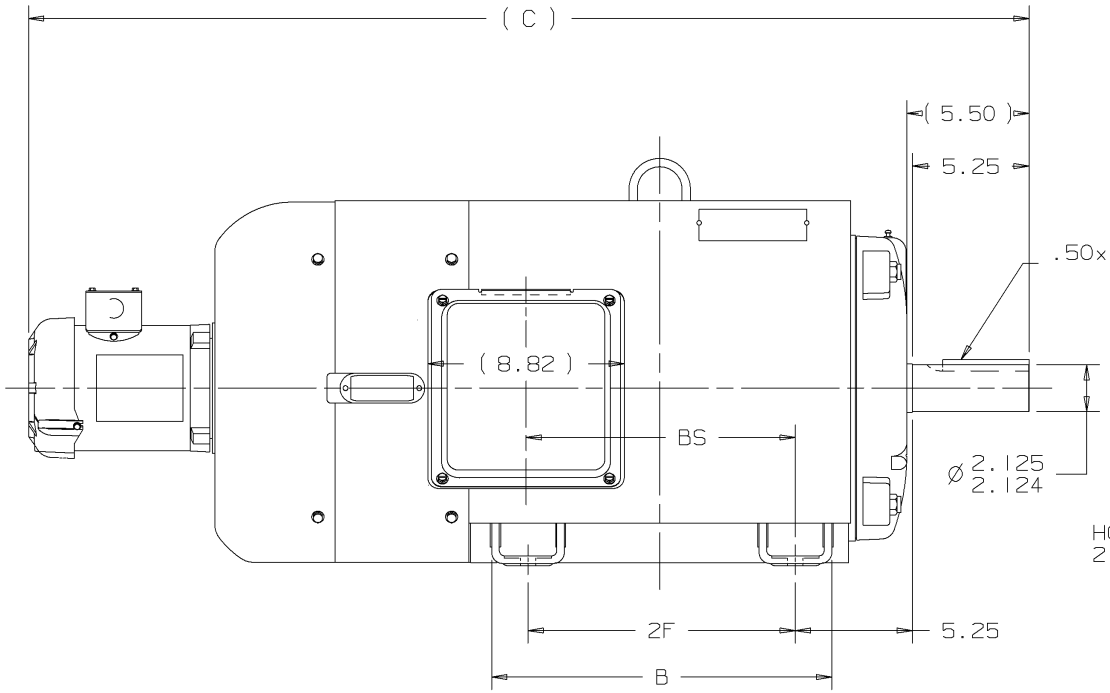

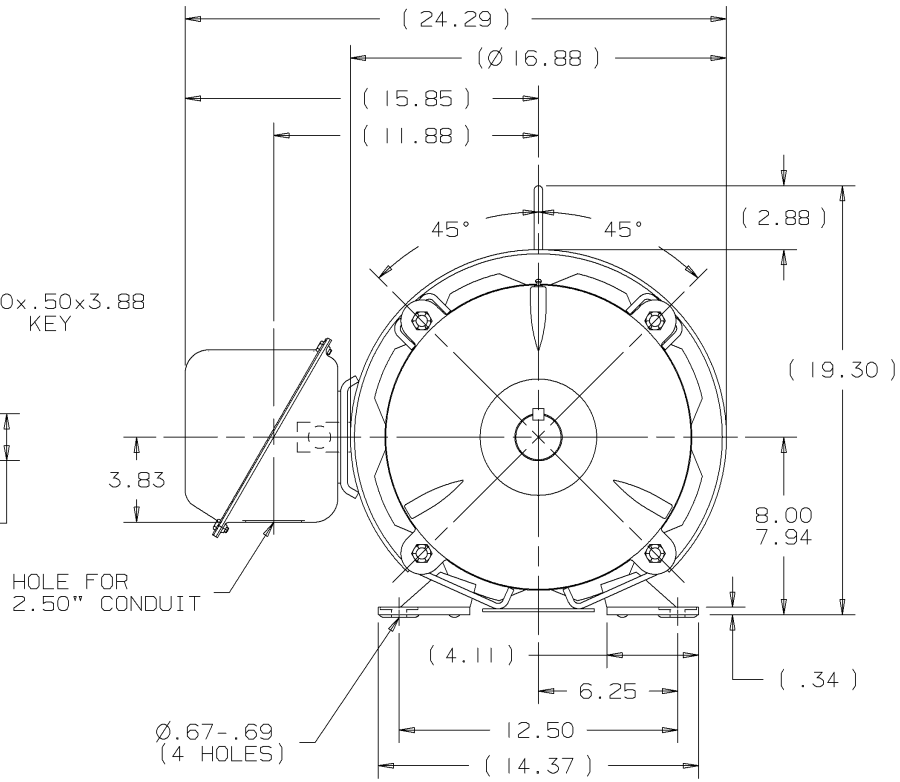

NOTES:
1. CONDUIT BOX CAN BE ROTATED IN 90° STEPS
2. NAMEPLATES TO BE READ FROM CONDUIT BOX SIDE OF MOTOR

F2 MOUNT

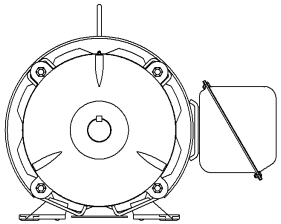

DASH	FRAME	C	BS	B	2F		
1550	324T	43.41	10.59	13.76	10.50		
1700	326T	44.91	12.09	15.26	12.00		

NO.	REVISION	BY	DATE
1	NEW DRAWING	MSG	12-20-2001

TOLERANCES UNLESS SPECIFIED

DEC.	TOLERANCE
.X	±.1
.XX	±.03
.XXX	±.005
.XXXX	±.0005
ANG	± 7'30"

CHK

Lincoln MOTORS

TITLE OUTLINE
320T - STD. EFF. - TEBC - W/ENCODER

MAT'L.

FINISH

CAD FILE XGIBISSIJ

PURCHASED

DIST WA - LB - WP - LM - BR - BY

DRAWN	MSG	12-17-2001
CHK	ML	12-20-2001
APPD	MLB	12-20-2001
SCALE	.175 = 1	
REF		
FMF		
PREV		

SIZE B | DRAWING NO. XGIBISSIJ | REV. 1

THIS DRAWING IN DESIGN AND DETAIL IS OUR PROPERTY AND MUST NOT BE USE EXCEPT IN CONNECTION WITH OUR WORK. ALL RIGHTS OF DESIGN AND INVENTION ARE RESERVED.
THIS IS AND ELECTRONICALLY GENERATED DOCUMENT - DO NOT SCALE THIS PRINT