B-SS516690LN

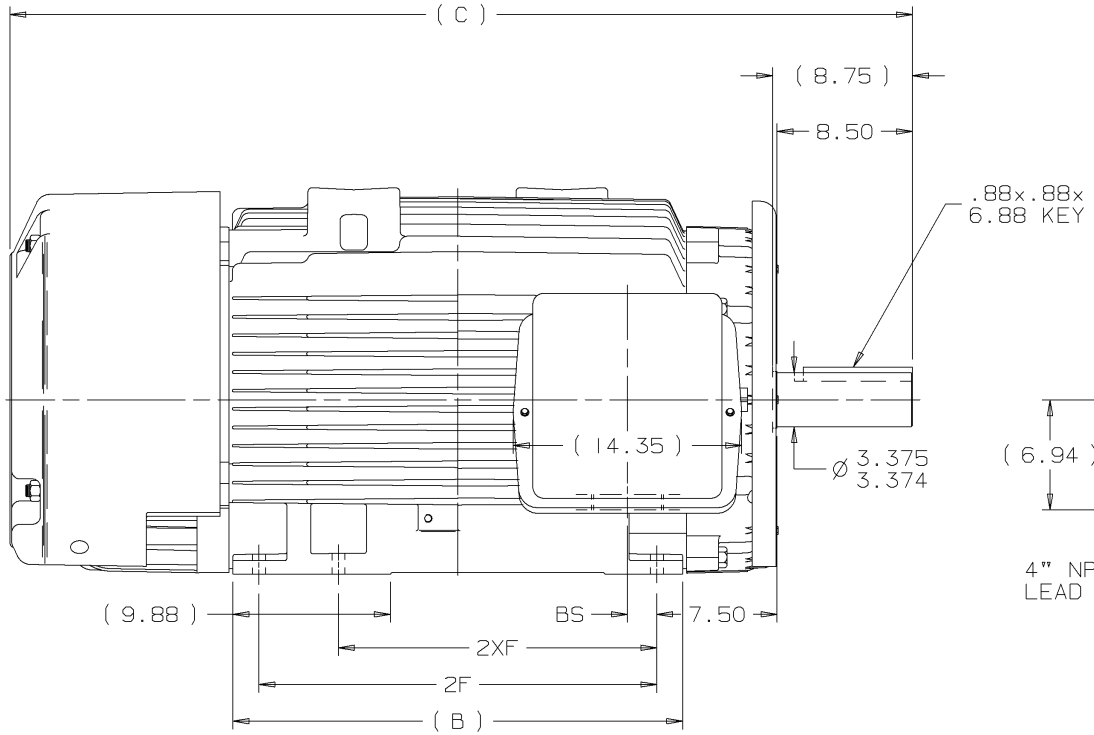

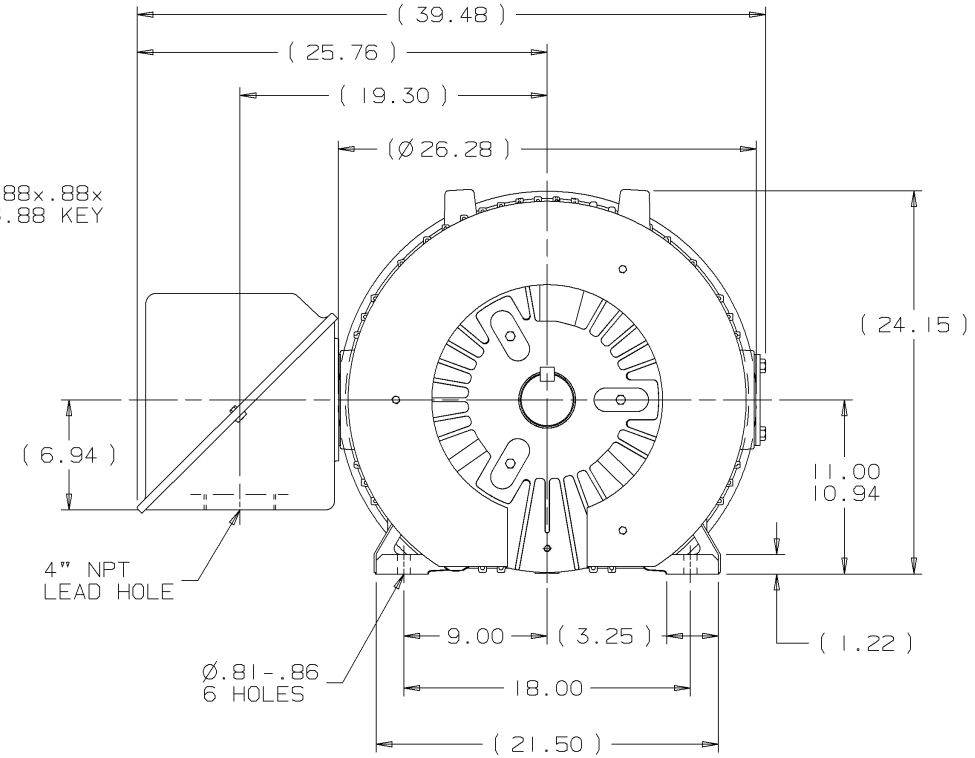

NOTES:
1. CONDUIT BOX CAN BE ROTATED IN 90° STEPS.
2. NAMEPLATES TO BE READ FROM CONDUIT BOX SIDE OF MOTOR

(B-SS517520)

DASH	FRAME	B	C	2F	2XF	BS
2875	447T	28.25	56.71		20.00	1.78
2875	449T	28.25	56.71	25.00		1.78

NO.	REVISION	BY	DATE
1	NEW DRAWING MU39977	KL	12-20-2001

TOLERANCES UNLESS SPECIFIED

DEC.	TOLERANCE
.X	±.1
.XX	±.03
.XXX	±.005
.XXXX	±.0005
ANG	± 7'30"

CHK

Lincoln MOTORS

TITLE OUTLINE - EXTERNAL BAFFLE
447/449T FR. - EXTENDED RATING - TEFC

MAT'L.

FINISH

CAD FILE SS516690LN.GEN

PURCHASED

DIST WA - ~~LX~~ - ~~WP~~ - ~~LXM~~ - ~~BR~~ - ~~BY~~

SIZE B

DRAWING NO. SS516690LN

REV.

DRAWN KL 12-19-2001
CHK DJK 12-19-2001
APPD JES 12-20-2001
SCALE
REF
FMF
PREV

THIS DRAWING IN DESIGN AND DETAIL IS OUR PROPERTY AND MUST NOT BE USE EXCEPT IN CONNECTION WITH OUR WORK. ALL RIGHTS OF DESIGN AND INVENTION ARE RESERVED.
THIS IS AND ELECTRONICALLY GENERATED DOCUMENT - DO NOT SCALE THIS PRINT