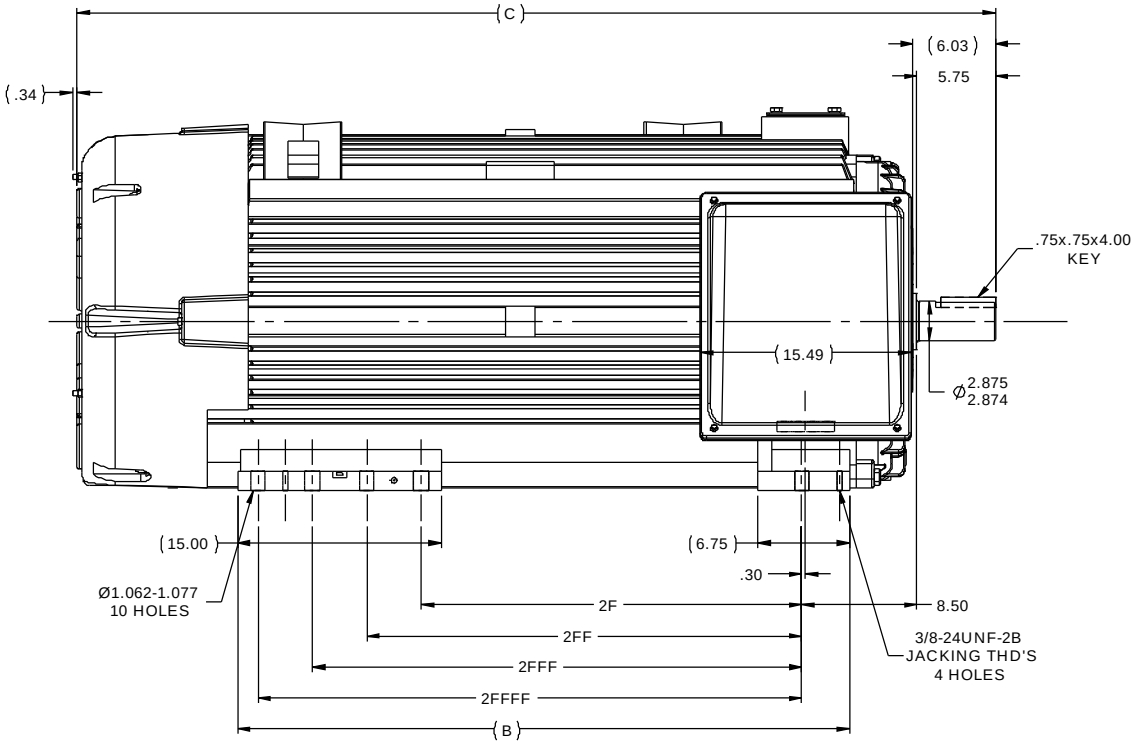

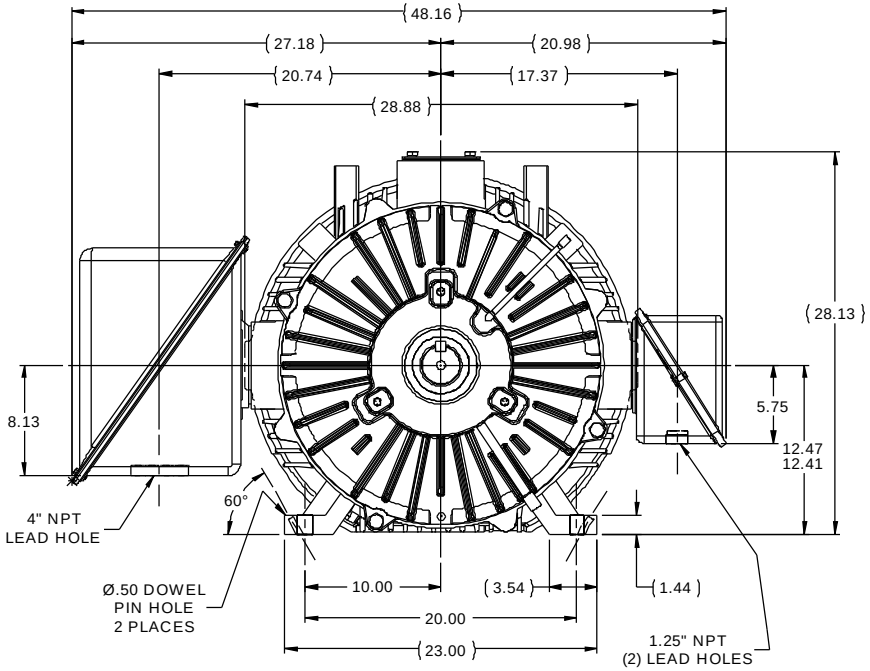

NOTE:
1. MAIN CONDUIT BOX CAN BE ROTATED IN 90 ° STEPS.
2. AUX. CONDUIT BOX CAN BE ROTATED 180°.
3. NAMEPLATES TO BE READ FROM MAIN CONDUIT BOX SIDE OF THE MOTOR.
4. MOTOR WEIGHT (MAXIMUM) = 5,500 LBS.

DASH	FRAME	B	C	2F	2FF	2FFF	2FFFF
4950	5009LS	45.05	67.56	28.00	---	---	---
4950	5010LS	45.05	67.56	---	32.00	---	---
4950	5011LS	45.05	67.56	---	---	36.00	---
4950	5012LS	45.05	67.56	---	---	---	40.00

NO	REVISION	BY & DATE	CHK
3	DRAWN IN SOLIDWORKS	TDB 08-23-2013	
2	ADD .50 MATERIAL TO C'BOX MTG. AREA CN 37629	MSG 02-26-2004	ML
1	NEW DRAWING DEV. ENG. CN 31102	DRS 05-09-2001	

TOLERANCES UNLESS SPECIFIED

DEC	INCHES
.X	±.1
.XX	±.03
.XXX	±.005
.XXXX	±.0005
ANG	±7'30"

marathon electric

TITLE OUTLINE - TEFC - AUX. COND. BOX
5009-12LS FR. - CAST IRON C'BOXES

MAT'L
FINISH

DRAWN DRS 05-09-0221
CHK JHL 05-09-2001
APPR JES 05-09-2001
SCALE 7:64
REF
FMF
PAGE OF

THIRD ANGLE PROJECTION

RFP
PREV
NETWORK FILE NAME SS518466LN

SIZE B
DRAWING NO SS518466LN
REV 3

9/17/2013 1:37:47 PM - Converted by Connexus