A- 100135LN

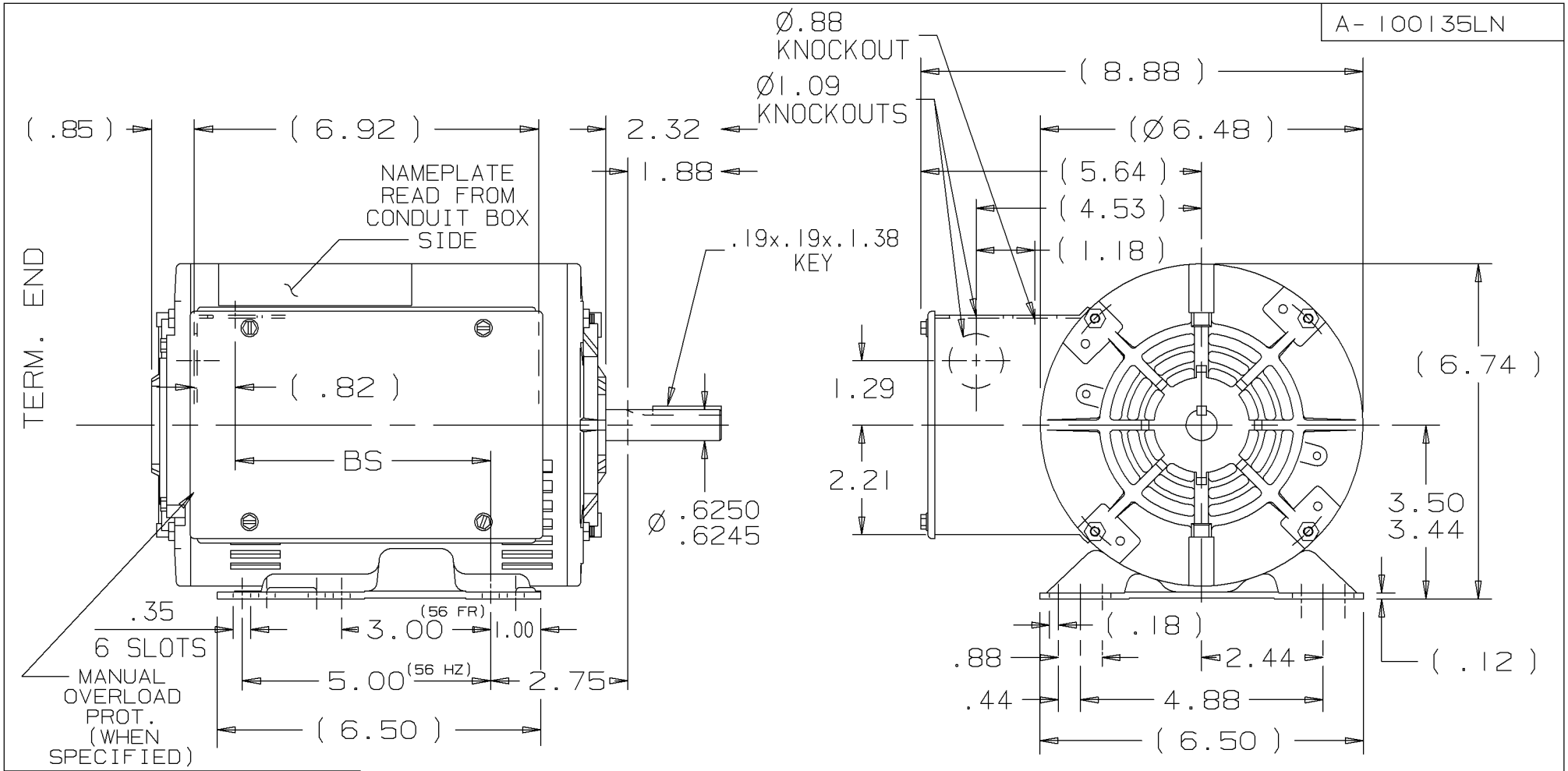

DASH	FR.	C	BS
756	56-75	11.44	5.14
856	56-85	12.44	6.14
906	56-90	12.94	6.64

REV	DATE	CHANGE	NAME
1	11-01-2000	NEW DRAWING	MSG

Lincoln MOTORS

UNLESS OTHERWISE SPECIFIED DIMENSIONS ARE IN INCHES
TOL. ON XX± .03 XXX± .005 XXXX± .0005 ANGLES± 7'30"

MAX. SURFACE ROUGHNESS UNLESS OTHERWISE NOTED

FINISH

MATERIAL

DRAWN BY	MSG	10-10-2000
CHKD BY	DRS	11-01-2000
APPD BY	GK	11-01-2000

PART NAME OUTLINE
56 FR. - DR. PR.

DRWG NO A- 100135LN

L | PURCHASED | CADD FILE NO. | 100135LN

8/24/2007 12:18:15 PM -