OLLM24796

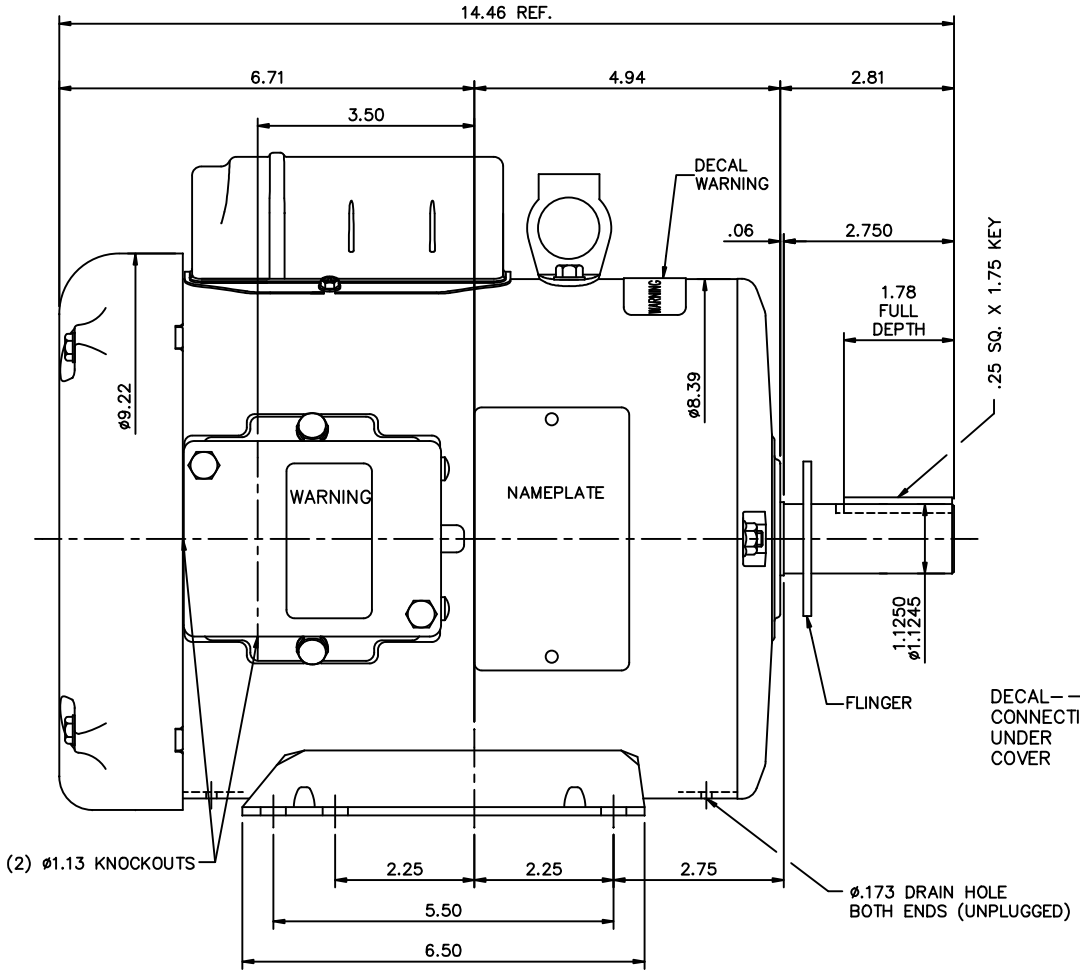

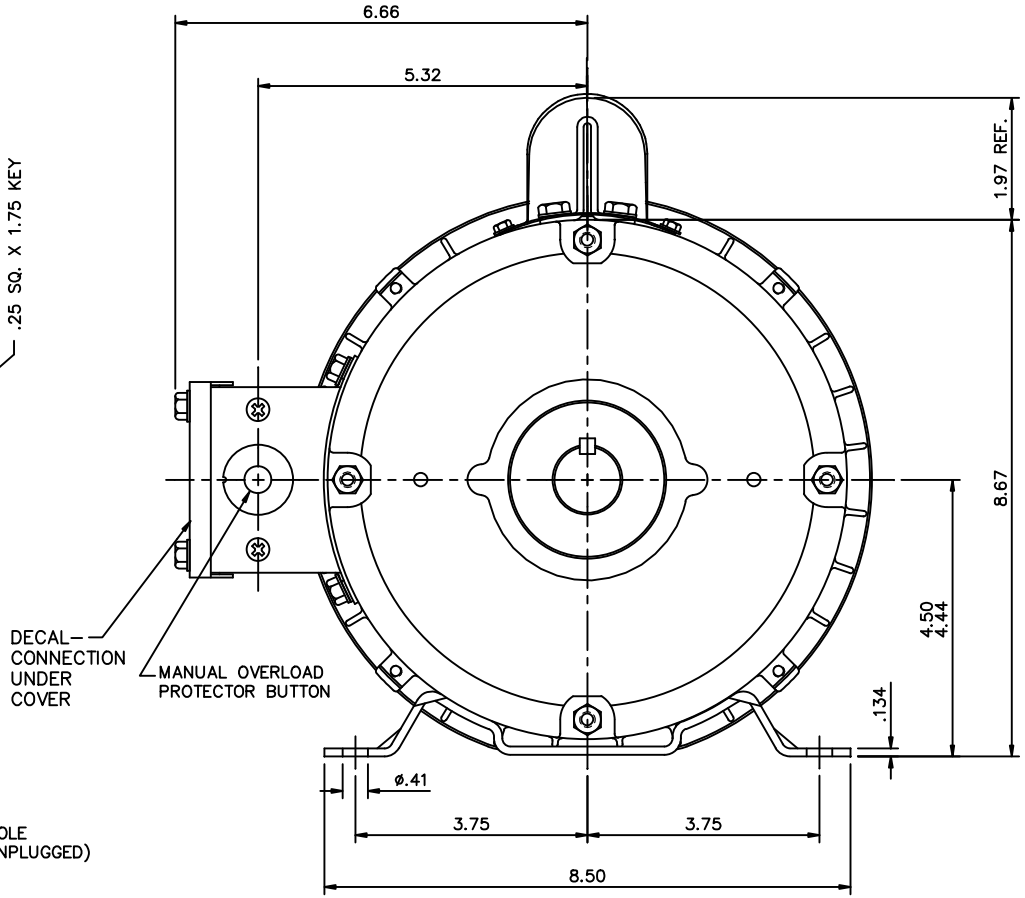

MOTOR SPECIAL FEATURES:

GASKETS THROUGHOUT
DRAIN HOLE IN FRAME BOTH ENDS (UNPLUGGED)
STAINLESS STEEL NAMEPLATE
MANUAL RESET OVERLOAD PROTECTOR
DOUBLE SEALED BALL BEARINGS
FLINGER

NO.	REVISION	BY & DATE	CHK
01	WARNING DECAL FOR LIFTING ADDED	AK 04/06/10	

TOLERANCES UNLESS SPECIFIED

DEC.	INCHES
.X	±.1
.XX	±.03
.XXX	±.005
.XXXX	±.0005
ANG	±1/2°

Lincoln MOTORS

TITLE: OUTLINE – 182T FRAME TEFC – RIGID MOUNT

MAT'L.
FINISH
RFP
DIST
CAD FILE: OLLM24796

DRAWN LST 11/3/08
CHK
APPD
SCALE 1=2
REF OL131541
FMF
PREV

SIZE B | DRAWING NO. OLLM24796 | REV. 01

THIS DRAWING IN DESIGN AND DETAIL IS OUR PROPERTY AND MUST NOT BE USED EXCEPT IN CONNECTION WITH OUR WORK ALL RIGHTS OF DESIGN AND INVENTION ARE RESERVED
THIS IS AN ELECTRONICALLY GENERATED DOCUMENT – DO NOT SCALE THIS PRINT