A- 100125LN

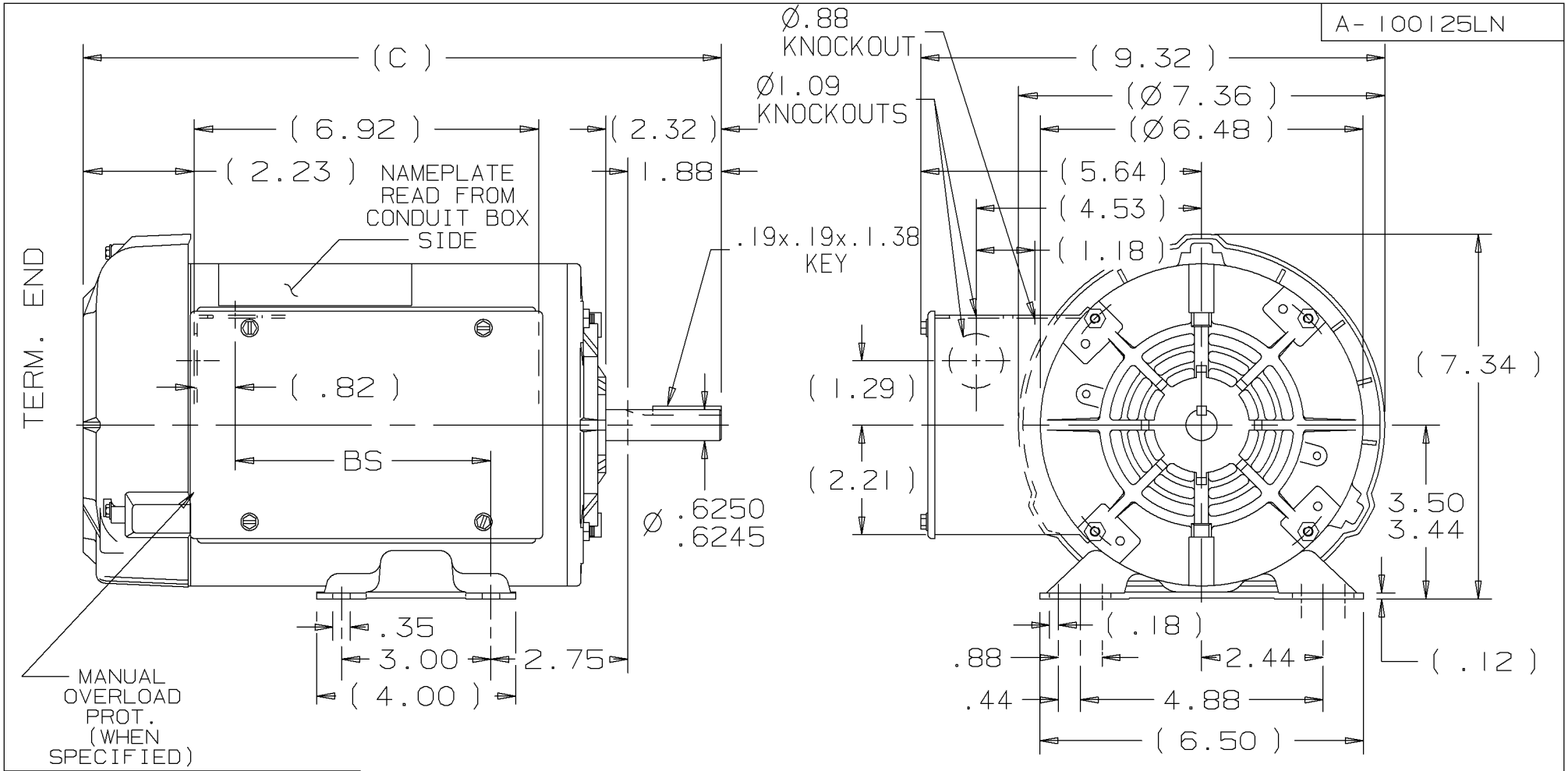

DASH	FR.	C	BS
756	56-75	12.82	5.14
806	56-80	13.32	5.64
856	56-85	13.82	6.14

REV	DATE	CHANGE	NAME
1	09-09-1999	NEW DRAWING	TRB

Lincoln MOTORS

UNLESS OTHERWISE SPECIFIED DIMENSIONS ARE IN INCHES
TOL. ON XX± .03 XXX± .005 XXXX± .0005 ANGLES± 7'30"

MAX. SURFACE ROUGHNESS UNLESS OTHERWISE NOTED

FINISH

MATERIAL

DRAWN BY	TRB	09-09-1999
CHKD BY	ML	09-09-1999
APPD BY	GK	09-09-1999

PART NAME OUTLINE
56 FR. DR.PR. - TEFC - 1Ø

DRWG NO A- 100125LN

PURCHASED | CADD FILE NO. 100125LN

8/24/2007 12:17:21 PM -