A- SS69019LN

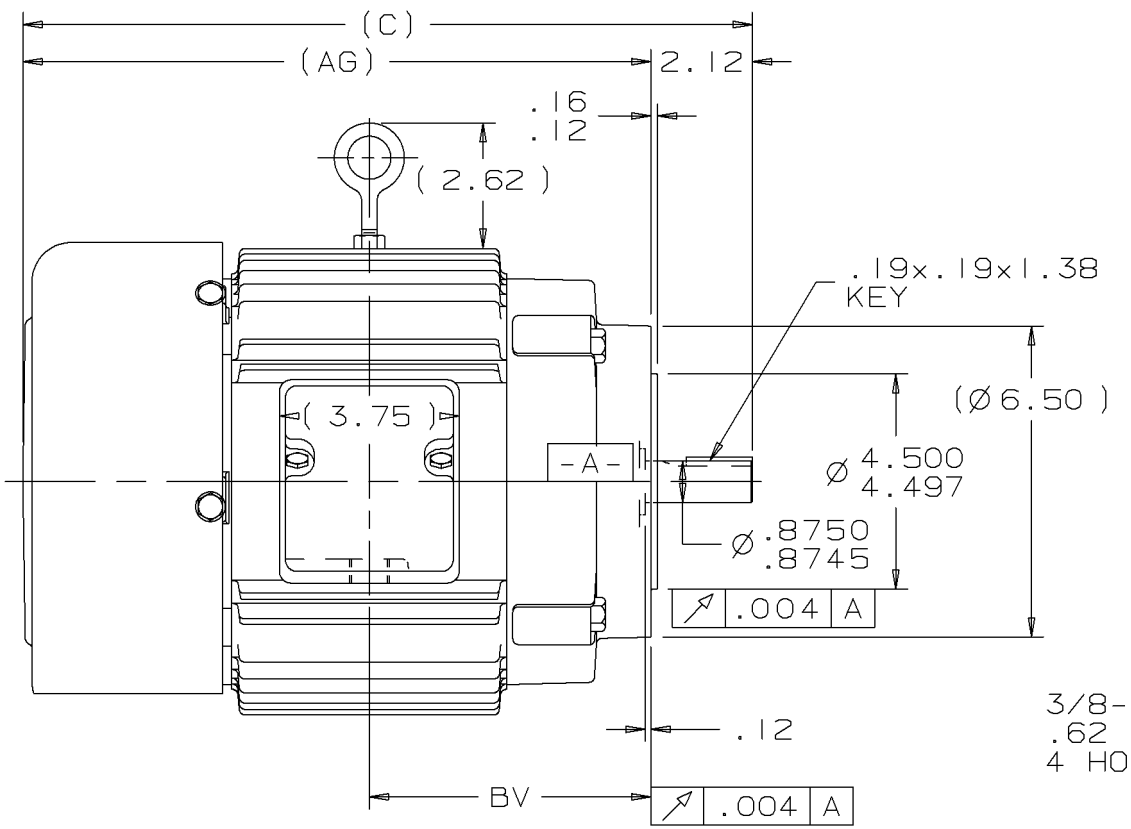

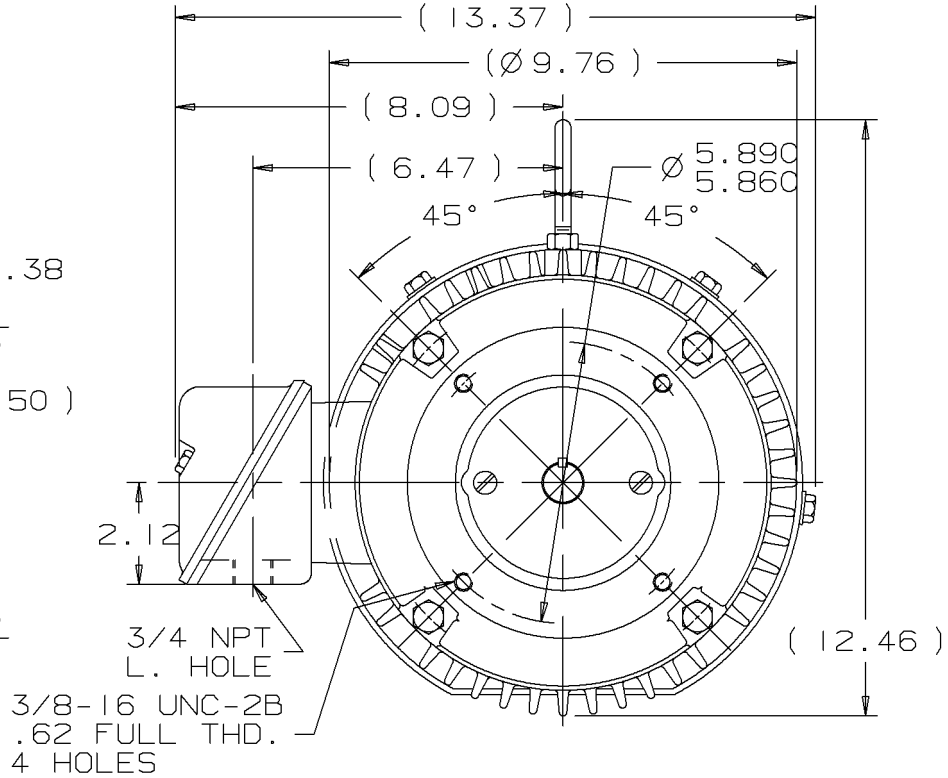

DASH	FR.	C	BV	AG
575	182U	15.22	5.88	13.10
675	182/4U	16.22	6.88	14.10

NOTES:
1. BOX CAN BE MOUNTED ON OPPOSITE SIDE BY REMOVING BRACKETS & TURNING FRAME 180°.
2. BOX CAN BE ROTATED IN 90° STEPS.
3. NAMEPLATE TO BE READ FROM CONDUIT BOX SIDE OF MOTOR.

REV	DATE	CHANGE	NAME
1	09-01-2000	NEW DRAWING MU3333	DRS

Lincoln MOTORS

UNLESS OTHERWISE SPECIFIED DIMENSIONS ARE IN INCHES
TOL. ON XX± .03 XXX± .005 XXXX± .0005 ANGLES± 7'30"

MAX. SURFACE ROUGHNESS UNLESS OTHERWISE NOTED

FINISH

MATERIAL

DRAWN BY DRS	09-01-2000
CHKD BY ML	09-01-2000
APPD BY TB	09-01-2000

PART NAME OUTLINE
180U FR. - TEFC - C-FACE

DRWG NO A- SS69019LN

PURCHASED | CADD FILE NO. SS69019LN

9/5/2007 2:18:29 AM -

ERROR: syntaxerror
OFFENDING COMMAND: --nostringval--

STACK:

/p2e
-savelevel-