SS622180LN

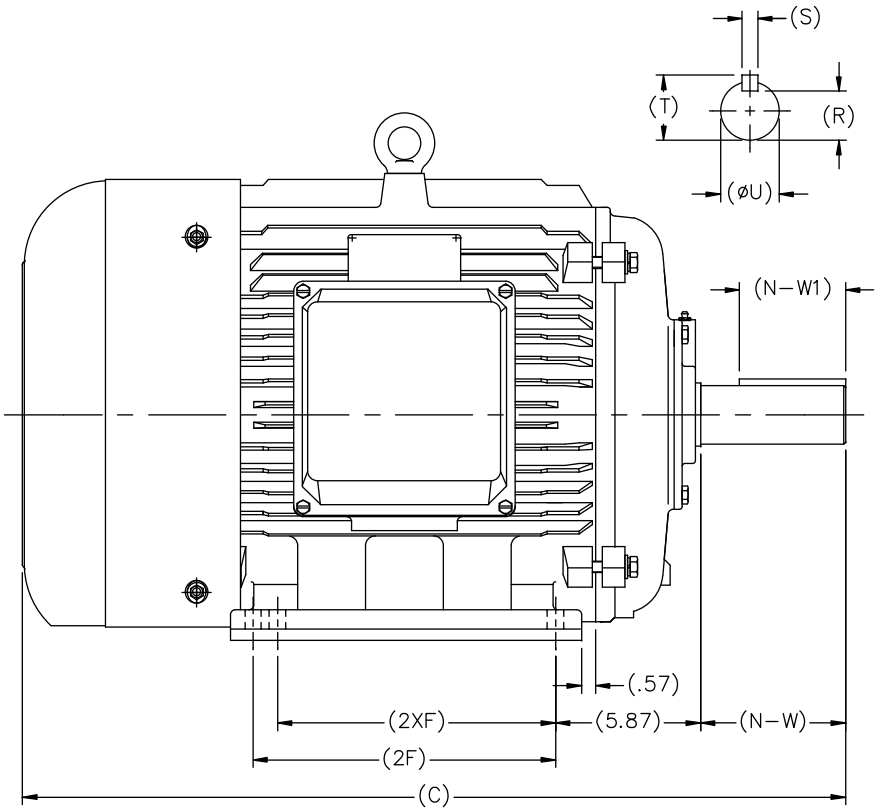

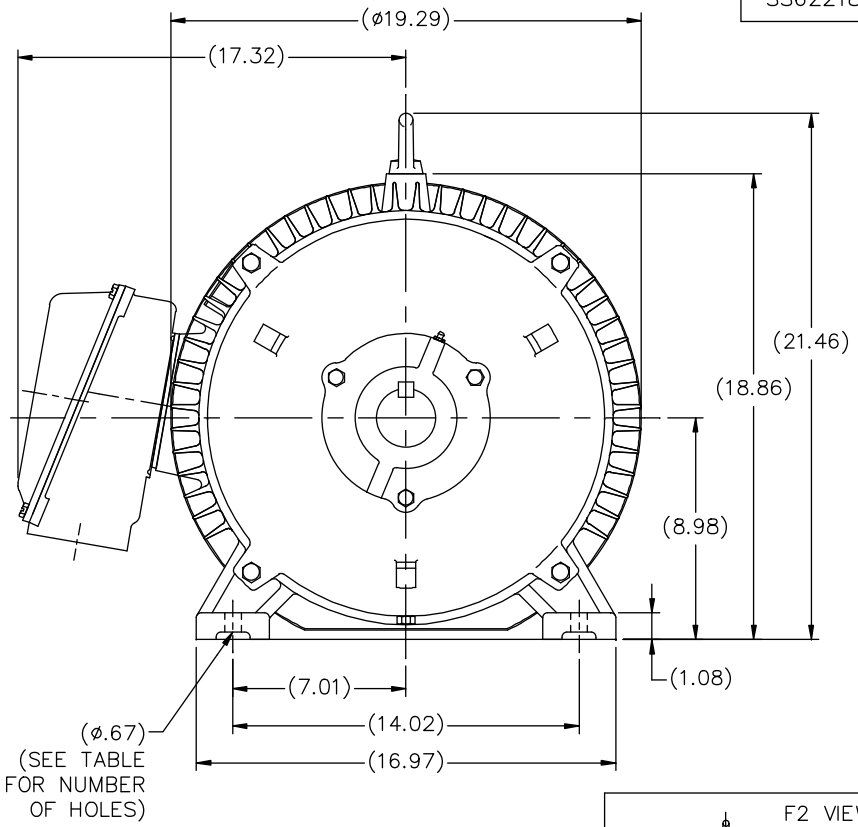

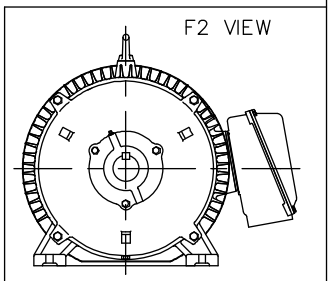

NT364TS−2	30.20	11.26	−−−	4	3.74	2.05	1.87	1.59	0.50	2.09
NT365TS−2	31.18	12.24	11.26	6						
NT364T−4, 6	32.32	11.26	−−−	4	5.87	4.29	2.37	2.01	0.63	2.64
NT365T−4, 6	33.31	12.24	11.26	6						
FRAME	C	2F	2XF	HOLES	N−W	N−W1	øU	R	S	T

NO.	REVISION	BY & DATE	CHK
1	ADDED F2 VIEW	TJW 7/9/2013	SB

TOLERANCES UNLESS SPECIFIED

DEC.	INCHES
.X	±.1
.XX	±.03
.XXX	±.005
.XXXX	±.0005
ANG	±7'30"

Lincoln MOTORS

TITLE OUTLINE
360 FR. − TEFC − (REDESIGNED)

MAT'L.

FINISH

RFP

DIST

CAD FILE SS622180LN

SIZE B

DRAWING NO. SS622180LN

PAGE OF

REV. 1

DRAWN MSG 02−13−2007
CHK ML 02−16−2207
APPD SB 02−23−2007
SCALE 1=5
REF
FMF HEBEI
PREV