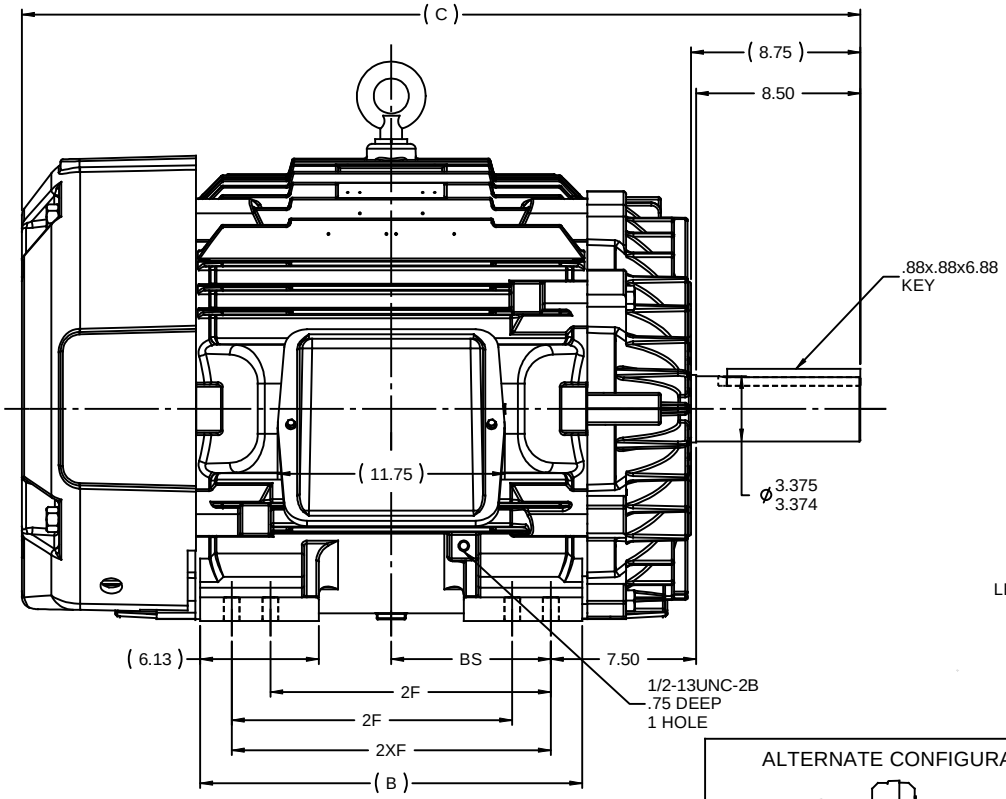

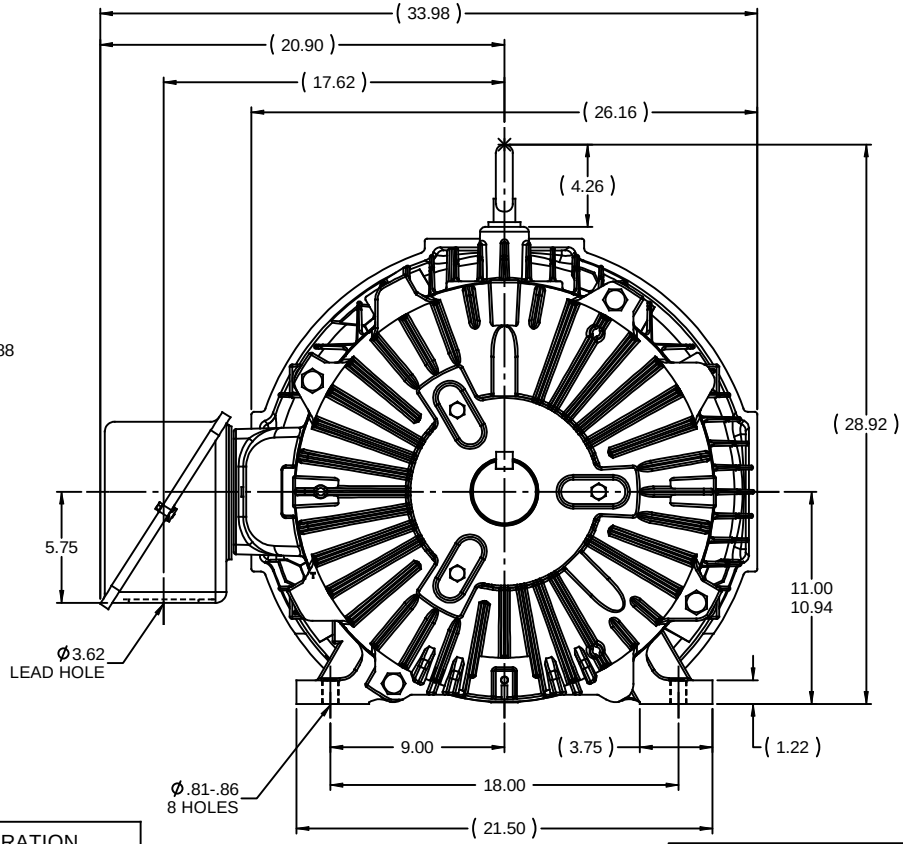

ALTERNATE CONFIGURATION

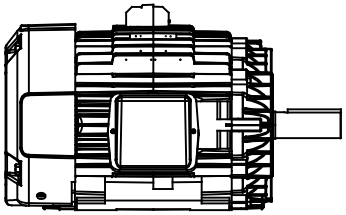

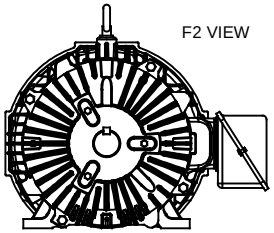

NOTES:
1. CONDUIT BOX CAN BE ROTATED IN 90° STEPS.
2. CONDUIT BOX CAN BE MOUNTED ON OPPOSITE SIDE BY REMOVING BRACKETS AND TURNING FRAME 180°
3. NAMEPLATES TO BE READ FROM CONDUIT BOX SIDE OF MOTOR.

DASH	FRAME	B	C	BS	2F	2XF	
1825	444T	17.75	41.35	7.25	14.50	---	
2025	444/445T	19.75	43.35	8.25	14.50	16.50	

NO	REVISION	BY & DATE	CHK
3	UPDATED FRAME, ADDED ALTERNATE CONFIGURATION.		
	ADDED 2XF COLUMN TO TABLE PER ISAAC 09-5049	JJB 1/5/2010	
2	CHG. FAN GUARD & CHG. C-DIM. PER CN39335	RWR 01-22-2007	ML
1	NEW DRAWING MU35793	KL 02-05-2001	

TOLERANCES UNLESS SPECIFIED

DEC	INCHES
.X	±.1
.XX	±.03
.XXX	±.005
.XXXX	±.0005
ANG	±7'30"

Lincoln Motors

TITLE OUTLINE - TEFC
444-445T FR. - STD

MAT'L
FINISH

DRAWN KL 02-05-2001
CHK DJK 02-05-2001
APPR DJK 02-05-2001
SCALE 5:32
REF
FMF
PAGE OF

THIRD ANGLE PROJECTION

RFP
PREV
NETWORK FILE NAME SS513898LN

SIZE B
DRAWING NO SS513898LN
REV 3