M1030994

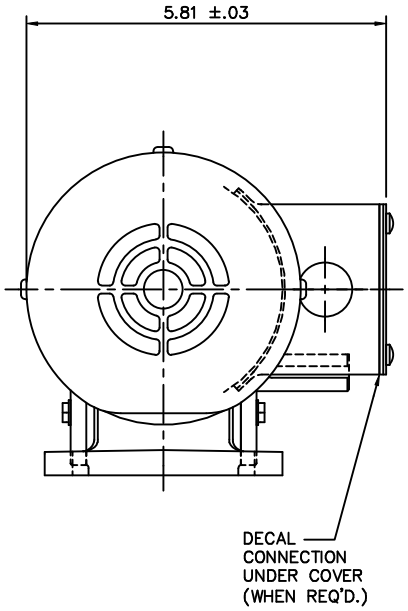

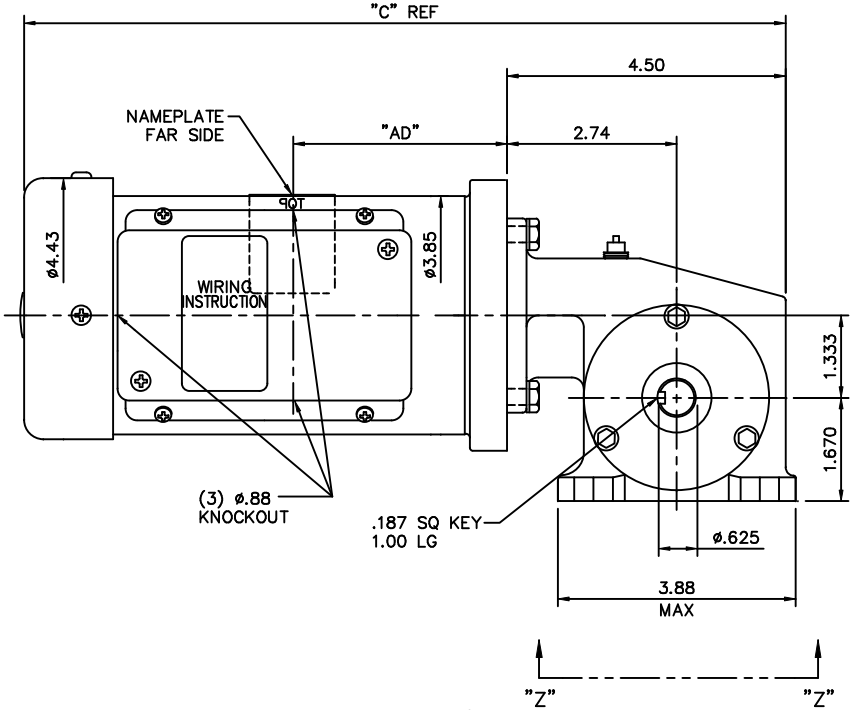

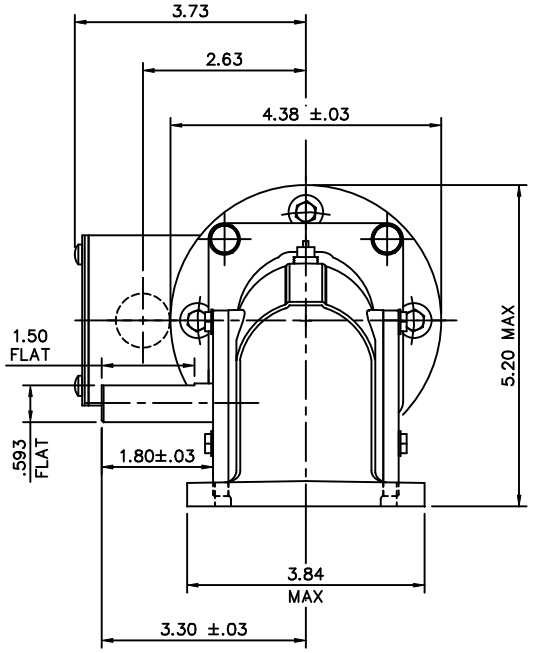

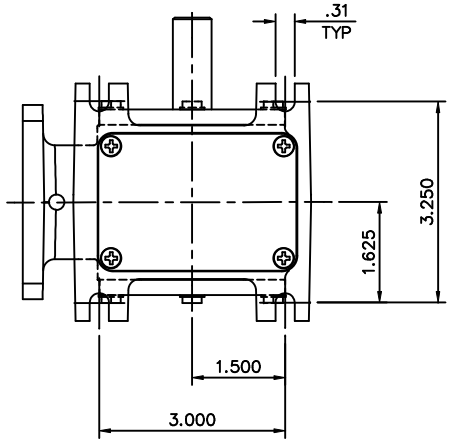

VIEW Z–Z

CATALOG NUMBER	OUTPUT RPM	FULL LOAD TORQUE LB.–IN.	INPUT HP	OVERHUNG LOAD LBS.	RATIO TO 1	"C"	"AD"
M1145127.00	29	220	3/8	235	60	12.31	3.50
M1145128.00	43	228	3/8	235	40	12.31	3.50
M1145129.00	86	138	3/8	235	20	12.31	3.50
M1145130.00	172	105	3/8	235	10	12.31	3.50
M1145131.00	345	54	3/8	235	05	12.31	3.50
M1145136.00	345	23	3/8	235	05	11.81	2.50

NO.	REVISION	BY & DATE	CHK
02	CHANGED TO DIE CAST GEARBOX PER ECN 06–3024.	RPB 7/13/06	BC
01	ADDED PERFORMANCE ATTRIBUTES TABLE	RLW 7/7/05	

TOLERANCES UNLESS SPECIFIED

DEC.	INCHES
.X	±.1
.XX	±.03
.XXX	±.005
.XXXX	±.0005
ANG	±1/2°

LEESON

ELECTRIC MOTORS
GEARMOTORS
AND DRIVES

TITLE OUTLINE
38 FRAME A.C. RIGHT ANGLE GEARMOTOR

MAT'L.

FINISH

CAD FILE M1030994

RFP

DIST

DRAWN	LST 5/16/05
CHK	RW 6/1/05
APPD	KH 6/1/05
SCALE	1=2
REF	PR040180
FMF	
PREV	

SIZE B | DRAWING NO. M1030994 | REV. 02