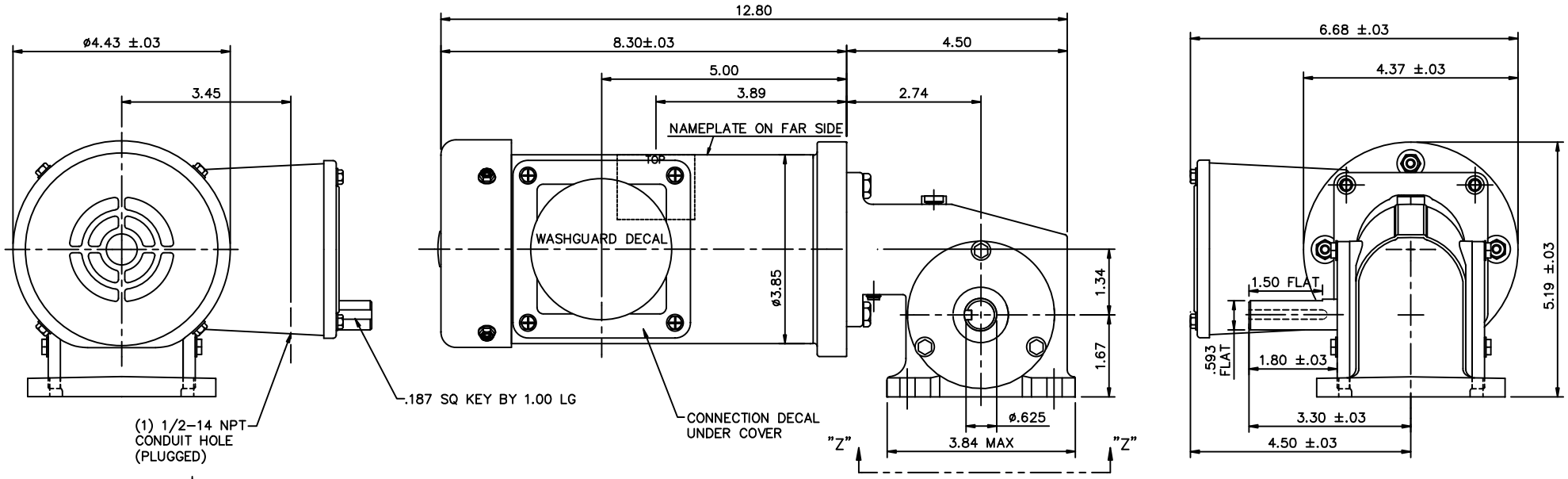

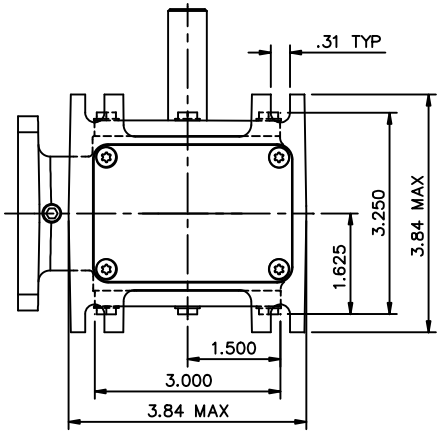

VIEW "Z-Z"

CATALOG NUMBER	SPEED RANGE RPM	FULL LOAD TORQUE LB.-IN.	INPUT HP	OVERHUNG LOAD LBS.	GEARMOTOR TYPE & FRAME	RATIO TO 1
M1145146.00	29	238	3/8	235	13F60-38F	60

NOTES:
1) O-RINGS BETWEEN FRAME AND ENDBELLS.
2) GASKETS THROUGHOUT.

NO.	REVISION	BY & DATE
01	ADDED LOCATION OF 1/2-14 NPT ISAAC 10-4079	GWS 6/14/11

TOLERANCES UNLESS SPECIFIED

DEC.	INCHES
.X	±.1
.XX	±.03
.XXX	±.005
.XXXX	±.0005
ANG	±1/2°

CHK

LEESON — ELECTRIC MOTORS GEARMOTORS AND DRIVES

TITLE: OUTLINE DRAWING 13 SERIES – 38 FRAME WASHGUARD

MAT'L.

FINISH

RFP

DIST

CAD FILE: OLM1145146

DRAWN SRS 12/16/08

CHK

APPD

SCALE 1=2

REF M1030422.00

FMF M1145146.00

PREV

SIZE B

DRAWING NO. OLM1145146

REV. 01

THIS DRAWING IN DESIGN AND DETAIL IS OUR PROPERTY AND MUST NOT BE USED EXCEPT IN CONNECTION WITH OUR WORK ALL RIGHTS OF DESIGN AND INVENTION ARE RESERVED
THIS IS AN ELECTRONICALLY GENERATED DOCUMENT – DO NOT SCALE THIS PRINT