07LYH281

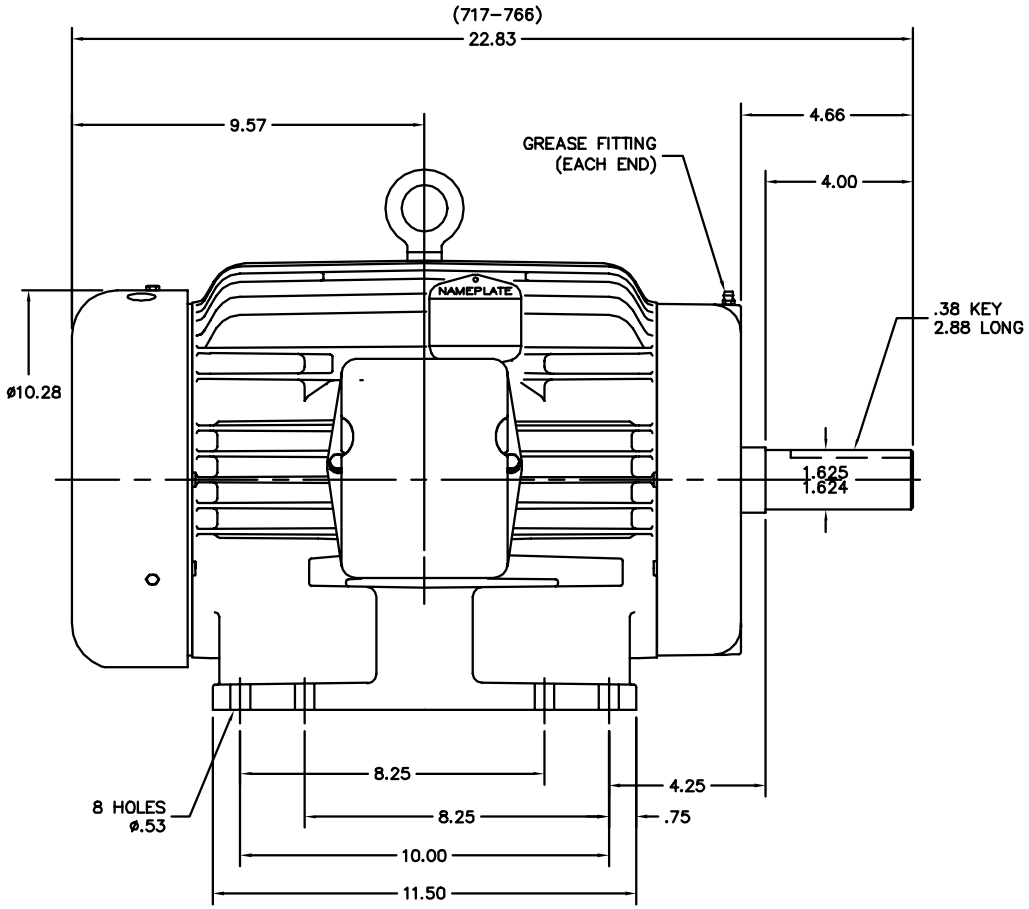

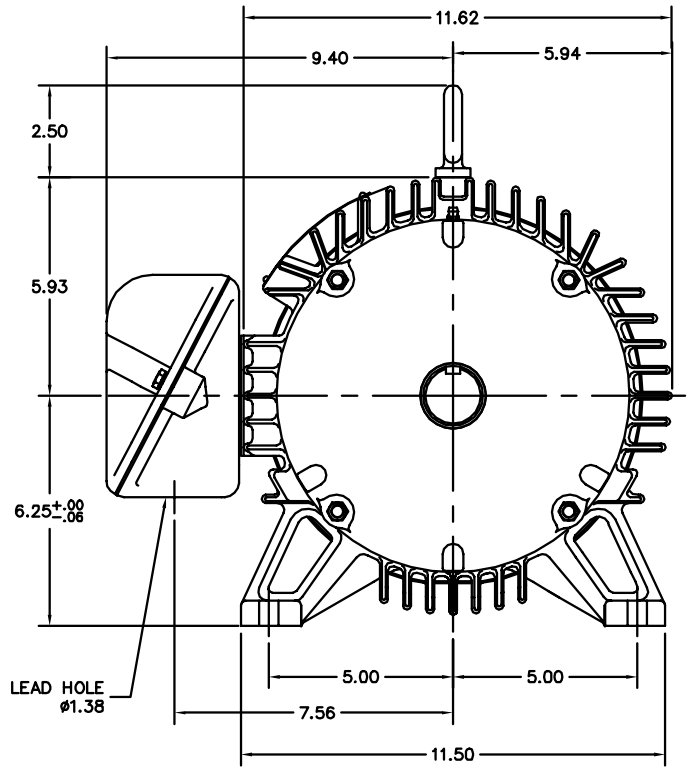

CUSTOMER IS RESPONSIBLE FOR DETERMINING THAT MOTOR PERFORMANCE IS SUITABLE IN THE APPLICATION.

REV. DESC: ADDED KOBX LEAD HOLE DIM				
REV. LTR: F	BY: RMP	REVISED: 14:54:09 09/09/2004	TDR: 342838	
FILE: AAA00006699			REF: 07LYH281	
MTL: –				

BALDOR ELECTRIC Co.

HORZ 254–6T TEFC 307M

07LYH281