Uncontrolled Copy

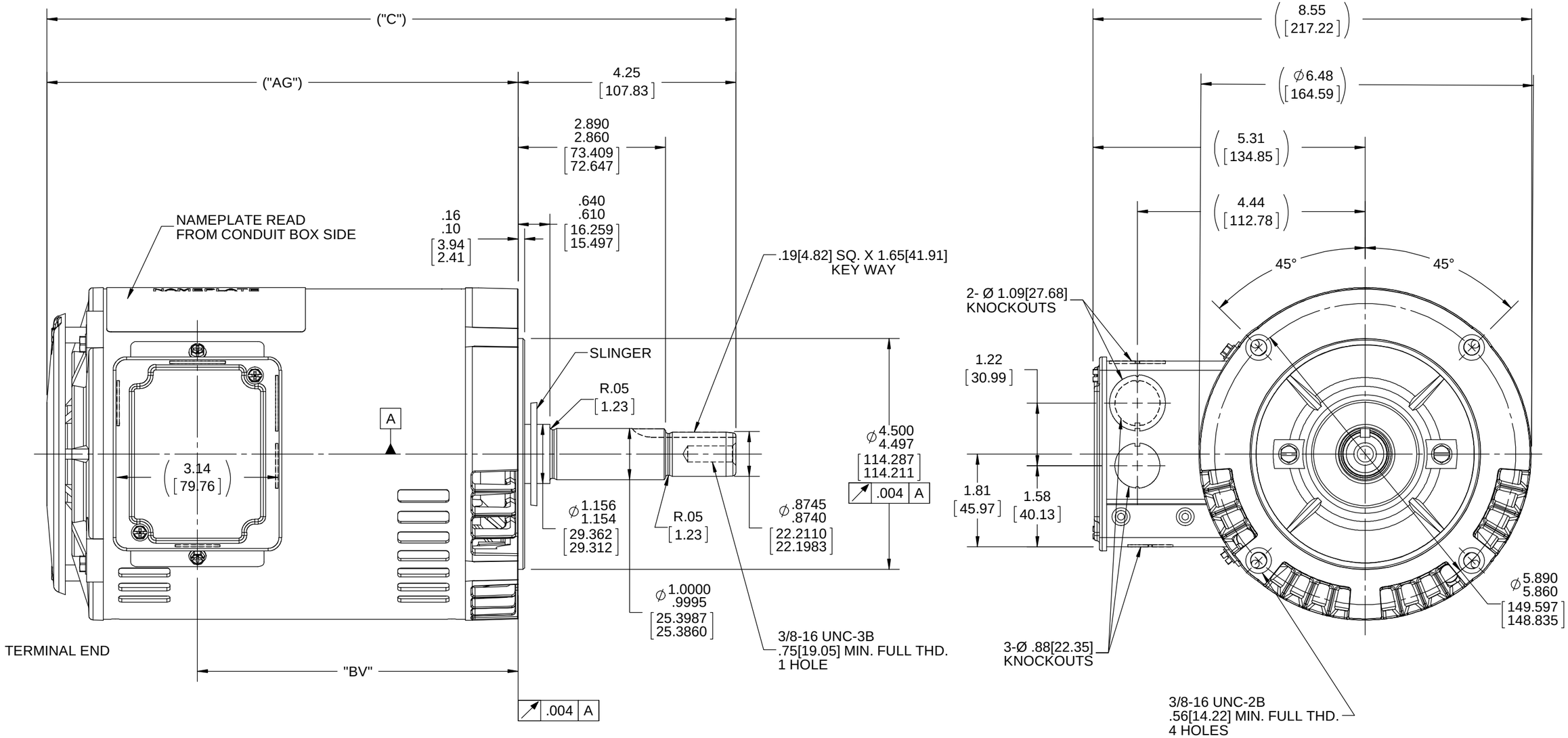

NOTE:
CONDUIT BOX CAN BE ROTATED IN 180° STEPS.

DASH NO.	"C"	"AG"	"BV"
656	12.93[328.42]	8.69[220.72]	5.75[146.05]
706	13.43[341.12]	9.19[233.42]	6.25[158.75]
756	13.93[353.82]	9.69[246.12]	6.75[171.45]
806	14.43[366.52]	10.19[258.82]	7.25[184.15]
856	14.93[379.22]	10.69[271.52]	7.75[196.85]
906	15.43[391.92]	11.19[284.22]	8.25[209.55]

DRAWING REVISION	REVISION BY	DATE
K	A. KEETHA	02/12/2018
ECO: ECO-0143026	APPROVED BY: PST	DATE: 04/11/2018

ECO DESCRIPTION
OUTLINE CONVERSION PROJECT

COPYRIGHT REGAL BELOIT AMERICA, INC. ALL RIGHTS RESERVED.
PROPRIETARY AND CONFIDENTIAL INFORMATION - THIS DOCUMENT IS THE PROPERTY OF REGAL BELOIT AMERICA, INC. ("OWNER") AND CONTAINS OWNER'S PROPRIETARY INFORMATION. ANY PERSON, CORPORATION OR OTHER FIRM RECEIVING IT IS DEEMED, BY RECEIVING IT, TO AGREE THAT IT, AND/OR ANY PART OF IT, SHALL NOT BE DISCLOSED TO ANY PERSON, CORPORATION OR OTHER ENTITY, DUPLICATED, AND/OR USED, EXCEPT AS EXPRESSLY APPROVED IN WRITING IN ADVANCE BY OWNER. THIS DOCUMENT SHALL BE RETURNED TO OWNER UPON REQUEST. IT MAY BE SUBJECT TO CERTAIN RESTRICTIONS UNDER APPLICABLE EXPORT CONTROL LAWS AND REGULATIONS.

TOLERANCES UNLESS OTHERWISE SPECIFIED:

DEC.	INCH	mm	ANGLE
.X	±0.1	[±2.5]	±7' 30"
.XX	±0.03	[±0.76]	
.XXX	±0.005	[±0.127]	
.XXXX	±0.0005	[±0.0127]	

REMOVE BURRS & BREAK SHARP EDGES: .003/.015 [.076/.381] X 45 °
CORNER FILLETS: R.02 [.51]
MACHINED SURFACES: 200 INCH / 5.1 mm
mm SHOWN IN [BRACKETS]

DRAWN BY	SMC
DATE	10-30-1990
APPROVED BY	ML
DATE	10-31-1990
REFERENCE	100186
THIRD ANGLE PROJECTION	

REGAL™ Regal Beloit America, Inc.

DESCRIPTION
OUTLINE
140T FRAME-BB-DR.PR- C'FACE-3Ø-JM. EXT.

MATERIAL | PROCESS/FINISH

SIZE: B | DRAWING NUMBER: 100186 | SHEET: 1 OF 1