35LYJ382

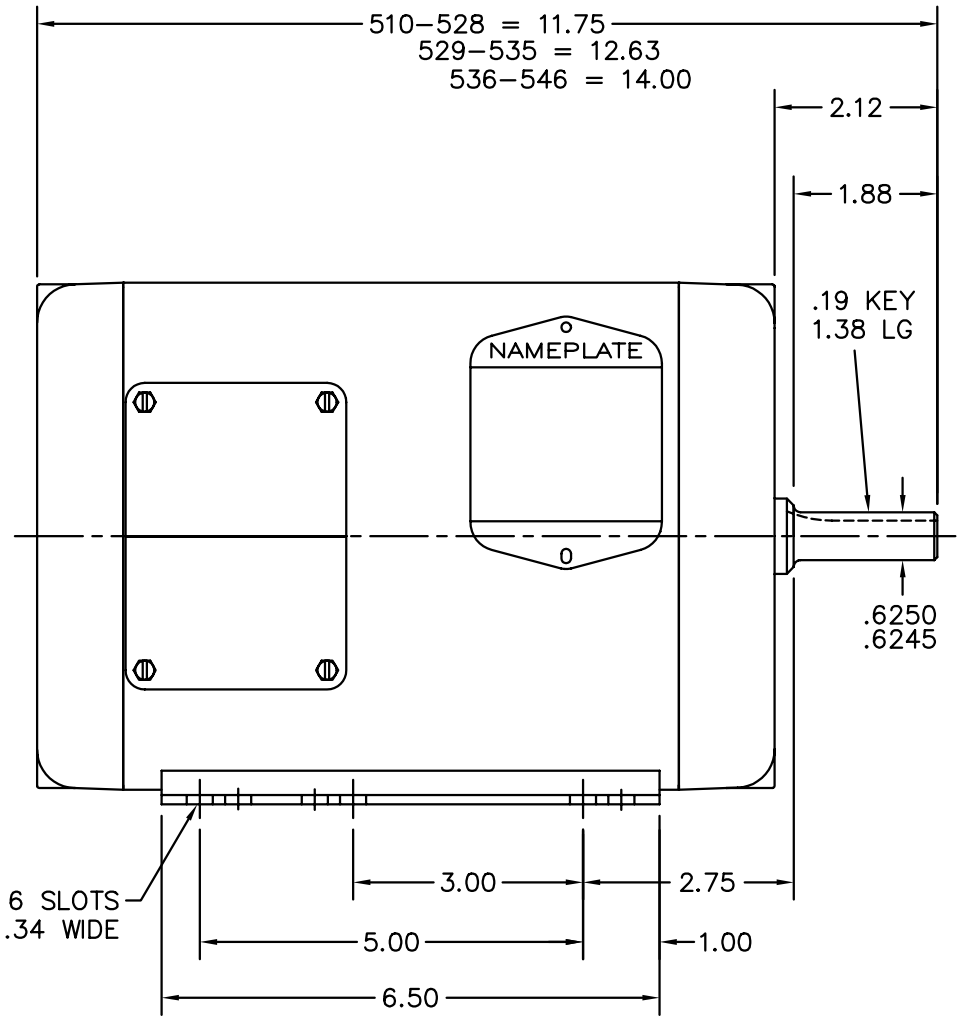

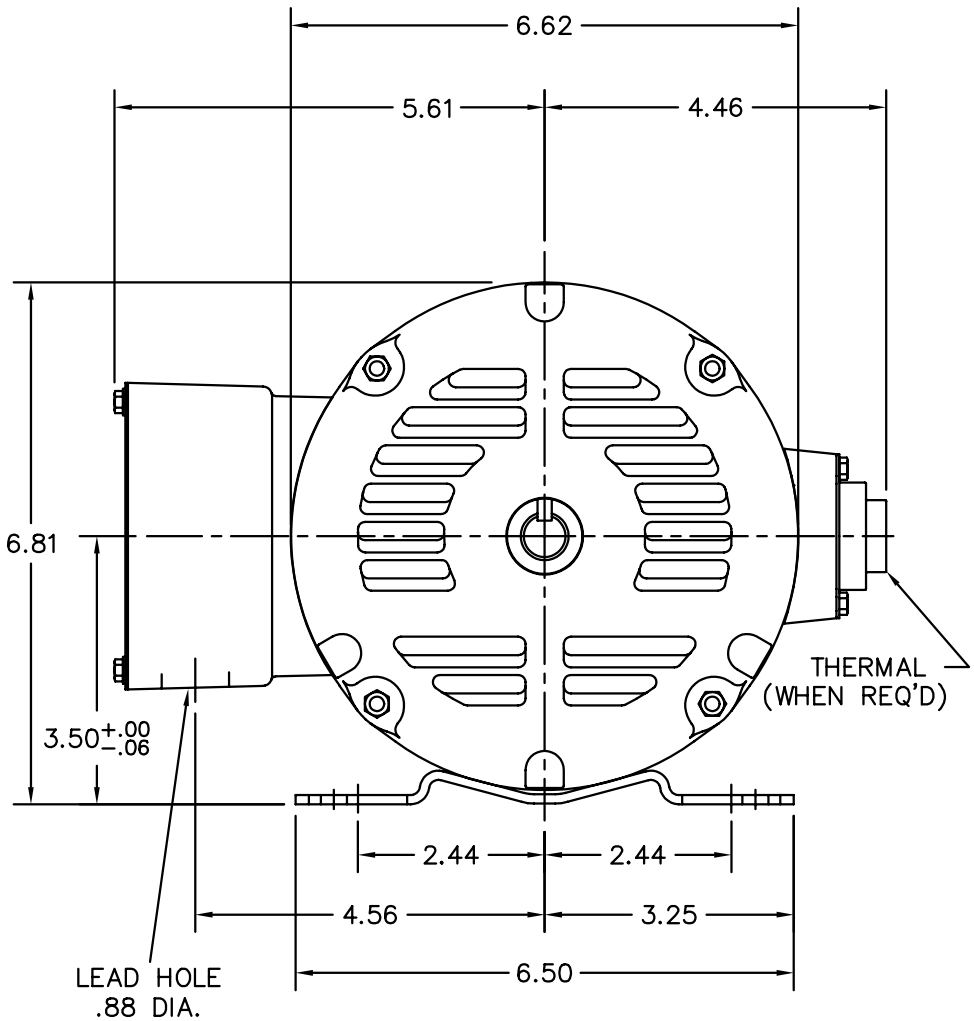

CUST. NAME		CUST. P.O.		CERTIFIED BY	MODEL		INSUL	AMB
H.P.	MTG	TYPE	R.P.M.	VOLTS	ENCL	PHASE	FREQ	FRAME

REV. DESC: CHG'D CONDUIT BOX AND LID (SEE EC09)			
REV. LTR: C	BY: JED	REVISED: 04/09/99 11:06	TDR: 0171806
35LYJ382		FILE: AAA00010396	MDL: –
		MTL: –	

BALDOR ELECTRIC Co.

STD HORZ 35M NEMA 56/56H OPEN

35LYJ382