Uncontrolled Copy

SS86566

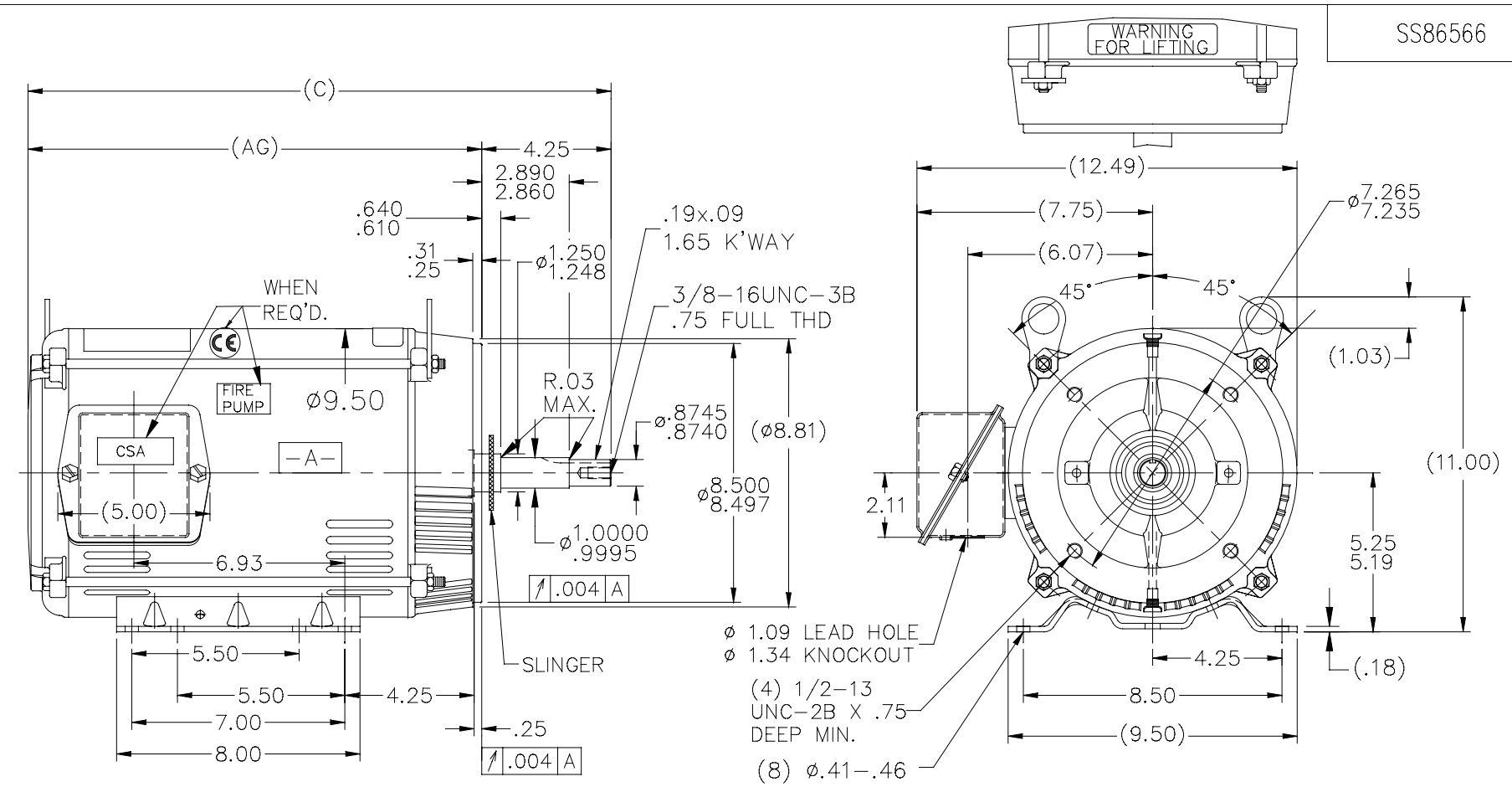

DASH	FR.	C	AG	BS	MOUNTING
965	213JM	17.66	13.41	5.43	
1115	213/15JM	19.16	14.91	6.93	
1240	213/15JM	20.41	16.16	8.18	F1 ONLY

NOTES:
1. NAMEPLATE TO BE READ FROM C'BOX SIDE OF MOTOR.
2. BOX CAN BE MOUNTED IN 90° STEPS.
3. BOX CAN BE MOUNTED ON OPPOSITE SIDE BY REMOVING BRACKETS AND TURNING FRAME 180°. (EXCEPT AS NOTED)

NO.	REVISION	BY & DATE
7	TITLE BLOCK LOGO CHANGE PER ECO-0078542	MDV 06/09/2015
6	ø.8745/.8740 WAS ø.8750/.8745 ECN #21254	WGJ 08/03/2011
5	UPDATED DRAWING	TJW 04/27/2007
4	REDRAWN IN AUTOCAD	TAT 07-06-2004
3	UPDATED C' BOX GEOMETRY CN 28425	DRS 04-16-2001
2	REPLACED FRONT BRACKET A86100 WITH A86910	DA 03-11-1996

TOLERANCES UNLESS SPECIFIED

CHK	DEC.	INCHES
EMH		
	.X	±.1
ML	.XX	±.03
	.XXX	±.005
	.XXXX	±.0005
CHK	ANG	±7'30"

REGAL™ Regal Beloit America, Inc.

TITLE OUTLINE
210JM FR.-BB-TS-DR.PR.-C' FACE

MAT'L.
FINISH
CAD FILE ss86566

DRAWN KL 12-23-1994
CHK ML 12-23-1994
APPD DRN 12-23-1994
SCALE 1=5
REF
FMF
PREV

SIZE A | DRAWING NO. SS86566 | PAGE OF | REV. 7

RFP
DIST LB

THIS DRAWING IN DESIGN AND DETAIL IS OUR PROPERTY AND MUST NOT BE USED EXCEPT IN CONNECTION WITH OUR WORK ALL RIGHTS OF DESIGN AND INVENTION ARE RESERVED
THIS IS AN ELECTRONICALLY GENERATED DOCUMENT - DO NOT SCALE THIS PRINT

Uncontrolled Copy

EE7308

HIGH VOLTAGE

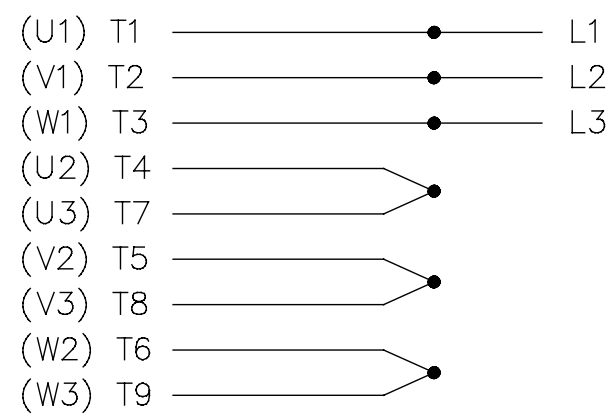

LOW VOLTAGE

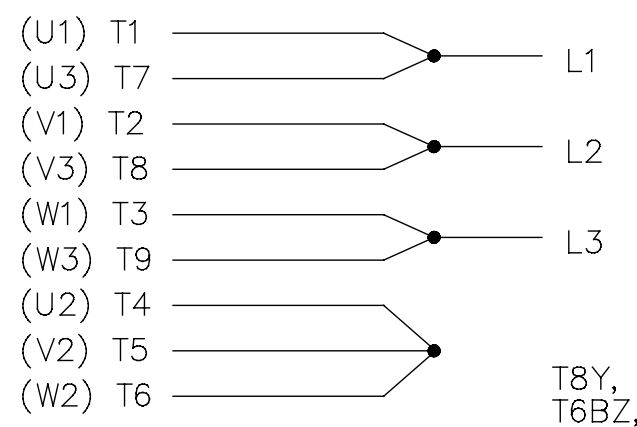

THREE PHASE DUAL VOLTAGE MOTOR

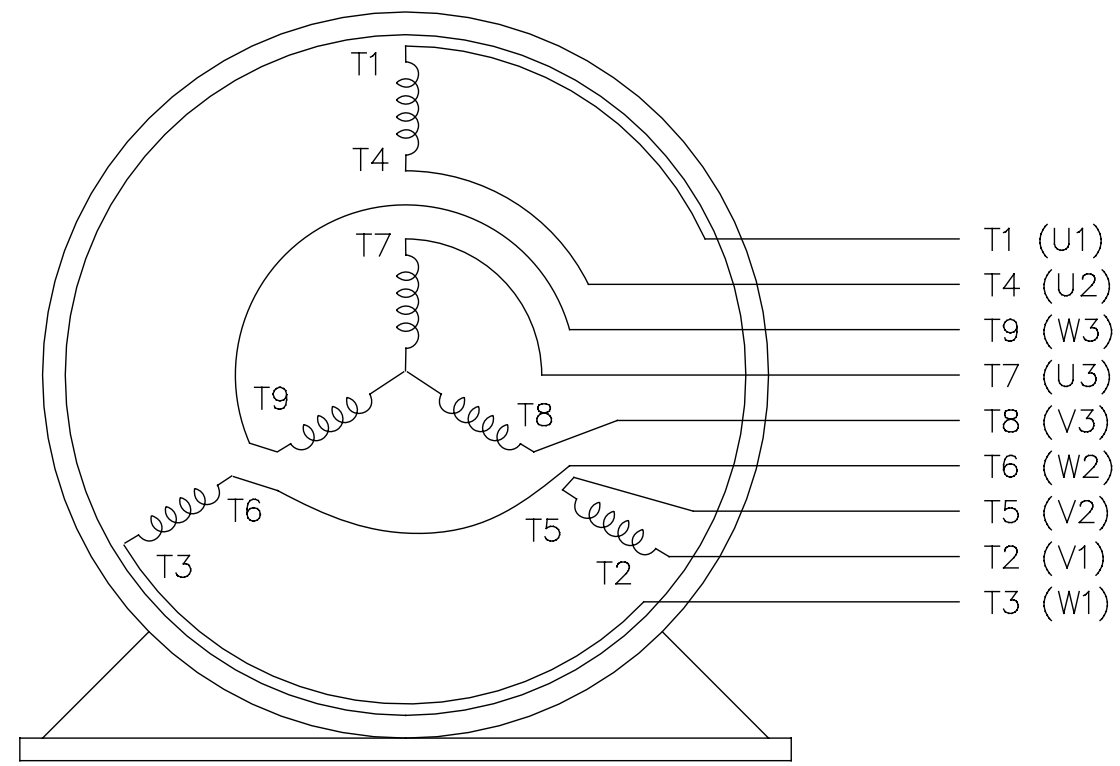

VIEW OF TERMINAL END

REF.
WINDING DIAGRAM

T8Y, T2Y, T2BL, T4BX, T2EC, T2G
T6BZ, T2B, T6BL, T4AV, T6B, T4B

OPTIONAL CORD CONNECTION

L1 WHITE
L2 RED
L3 BLACK

NO.	REVISION	BY & DATE	CHK	TOLERANCES UNLESS SPECIFIED DEC.	INCHES
5	CHG TO REGAL LOGO	SL 09/10/2015	AB		
4	REVISED IEC NOTATIONS	MSG 11/15/2011	CMN	.X	±.1
3	ADDED IEC NOTATIONS... (U1), (V1) ETC. MU95194	MSG 5/10/2010	MJS	.XX	±.02
2	ADDED THE OPTIONAL CORD CONNECTION MU46318	RDH 04/24/2003	DRS	.XXX	±.005
1	REDRAWN	RM 11/20/1990		.XXXX	±.0005
			ANG		±7'30"

Regal Beloit America, Inc.

TITLE CONNECTION DIAGRAM
3Ø – DUAL VOLTAGE MOTOR

MAT'L.
FINISH

DRAWN	RM 11/20/1990
CHK	ML 11/21/1990
APPD	SAS 04/24/2003
SCALE	1=1
REF	
FMF	
PREV	

THIS DRAWING IN DESIGN AND DETAIL IS OUR PROPERTY AND MUST NOT BE USED EXCEPT IN CONNECTION WITH OUR WORK ALL RIGHTS OF DESIGN AND INVENTION ARE RESERVED
THIS IS AN ELECTRONICALLY GENERATED DOCUMENT – DO NOT SCALE THIS PRINT

RFP
DIST WP

CAD FILE ee7308

SIZE	DRAWING NO.	PAGE OF	REV.
A	EE7308		4