035597

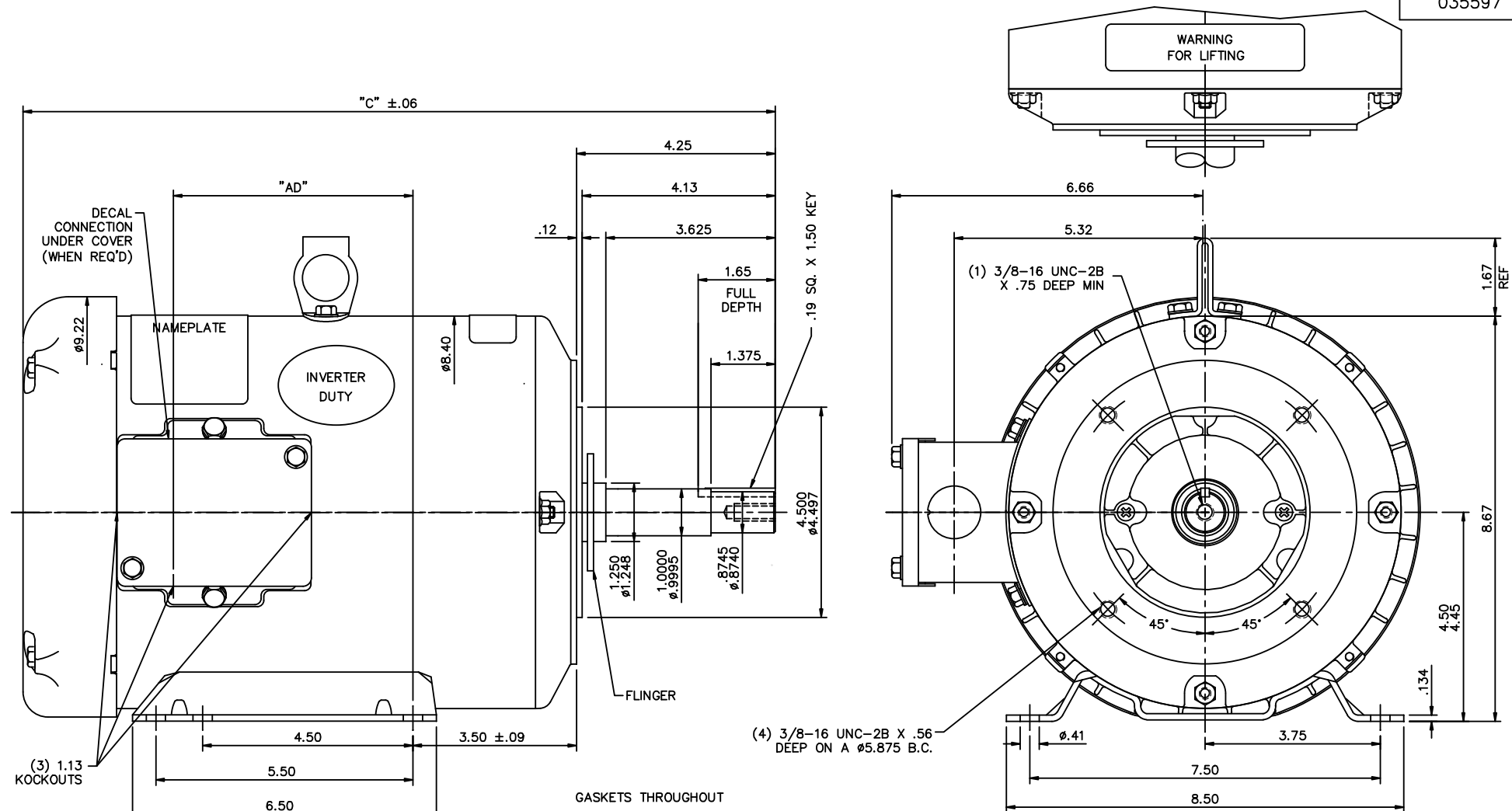


GASKETS THROUGHOUT

| DASH NO. | "C" | "AD" |
|---|---|---|
| 800 | 15.09 | 4.13 |
| 850 | 15.59 | 4.63 |
| 900 | 16.09 | 5.13 |
| 950 | 16.59 | 5.63 |
| 1000 | 17.09 | 6.13 |
| 1050 | 17.59 | 6.63 |
| 1100 | 18.09 | 7.13 |
| 1150 | 18.59 | 7.63 |

MAXIMUM FACE RUNOUT TO BE .004 T.I.R.
MAXIMUM PILOT ECCENTRICITY TO BE .004 T.I.R.
PERMISSIBLE SHAFT RUNOUT TO BE .002 T.I.R.

| NO. | REVISION | BY & DATE | CHK |
|---|---|---|---|
| 03 | ADDED 800 DASH VALUE | KK 02/23/2011 | |
| 02 | SHAFT RUNOUT WAS .004,CBOX SCREWS CHANGED | VV 5/20/2009 | |
| 01 | ADDED .19 SQ. X 1.50 KEY | GWS 3/12/08 | |

| TOLERANCES UNLESS SPECIFIED | |
|---|---|
| DEC. | INCHES |
| .X | ±.1 |
| .XX | ±.03 |
| .XXX | ±.005 |
| .XXXX | ±.0005 |
| ANG | ±1/2° |

MARATHON ELECTRIC

TITLE OUTLINE – 180JM FRAME
TEFC – RIGID "C" – JM PUMP

MAT'L.
FINISH

RFP
DIST

CAD FILE 035597

| | |
|---|---|
| DRAWN | VV 12/13/07 |
| CHK | |
| APPD | |
| SCALE | 1=2 |
| REF | |
| FMF | 184TTFW8917 |
| PREV | |

SIZE B | DRAWING NO. 035597 | REV. 03

THIS DRAWING IN DESIGN AND DETAIL IS OUR PROPERTY AND MUST NOT BE USED EXCEPT IN CONNECTION WITH OUR WORK ALL RIGHTS OF DESIGN AND INVENTION ARE RESERVED
THIS IS AN ELECTRONICALLY GENERATED DOCUMENT – DO NOT SCALE THIS PRINT