SS504363

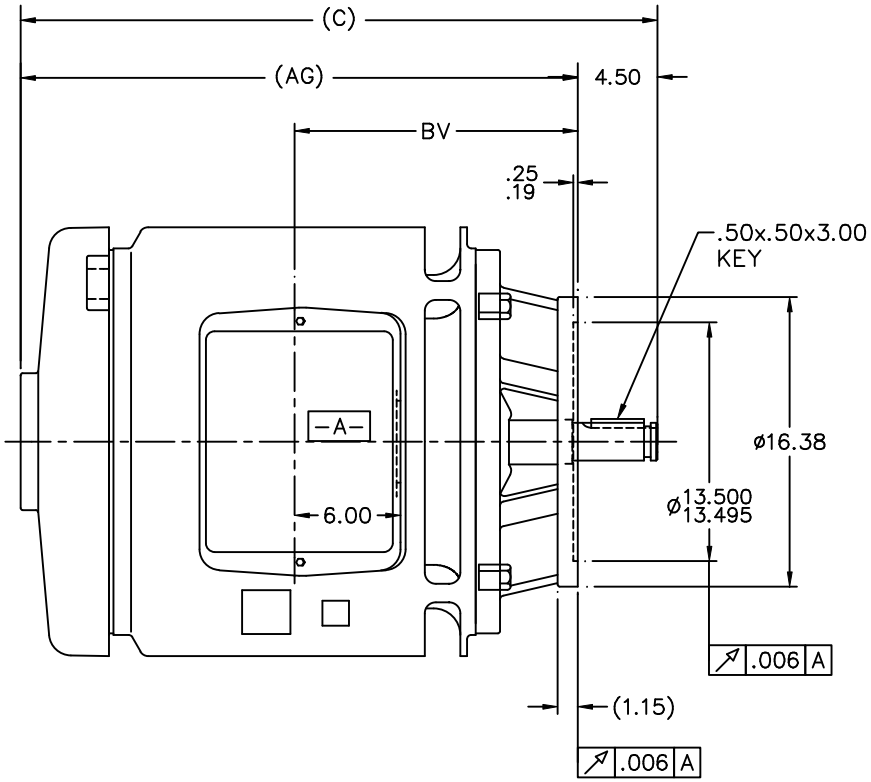

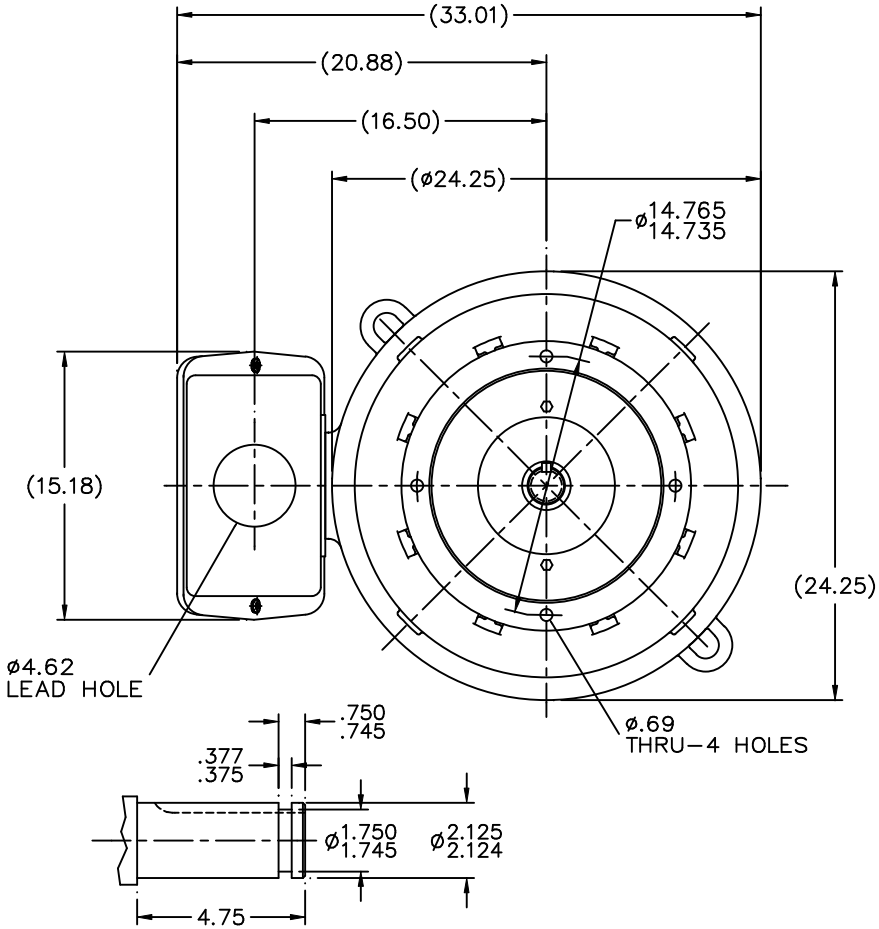

DETAIL OF SHAFT EXTENSION

NOTES:

1. COND. BOX CAN BE ROTATED IN 90. STEPS
2. NAMEPLATES TO BE READ FROM SHAFT EXT. END OF MOTOR.

DASH	FRAME	C	AG	B	2F	2FF	2FFF	BV
2050	440HP	36.02	31.52	---	---	---	---	16.02

NO.	REVISION	BY & DATE	CHK
11	CORRECTED BORDER TO MARATHON	RJW 05-18-2005	ML
10	ADDED LIFT LUGS TO ODE BRACKET CN 29499	DRS 03-24-2003	
9	UPDATED C'BOX GEOMETRY	DRS	
8	CORRECTED ø.69 HOLES – WERE 5/8–11	DA 01-26-1993	
7	REDRAWN AND UPDATED	DJK 11-23-1992	

TOLERANCES UNLESS SPECIFIED

DEC.	INCHES
.X	±.1
.XX	±.03
.XXX	±.005
.XXXX	±.0005
ANG	±7'30"

MARATHON ELECTRIC

TITLE OUTLINE – VERT. P'BASE 440HP FR. – DR.PR.

MAT'L.

FINISH

CAD FILE SS504363

RFP

DIST WA

DRAWN DJK 11-13-1992
CHK ML 11-18-1992
APPD GK 11-18-1992
SCALE 1=7
REF
FMF
PREV

SIZE B | DRAWING NO. SS504363 | PAGE OF | REV. 11

THIS DRAWING IN DESIGN AND DETAIL IS OUR PROPERTY AND MUST NOT BE USED EXCEPT IN CONNECTION WITH OUR WORK ALL RIGHTS OF DESIGN AND INVENTION ARE RESERVED
THIS IS AN ELECTRONICALLY GENERATED DOCUMENT – DO NOT SCALE THIS PRINT