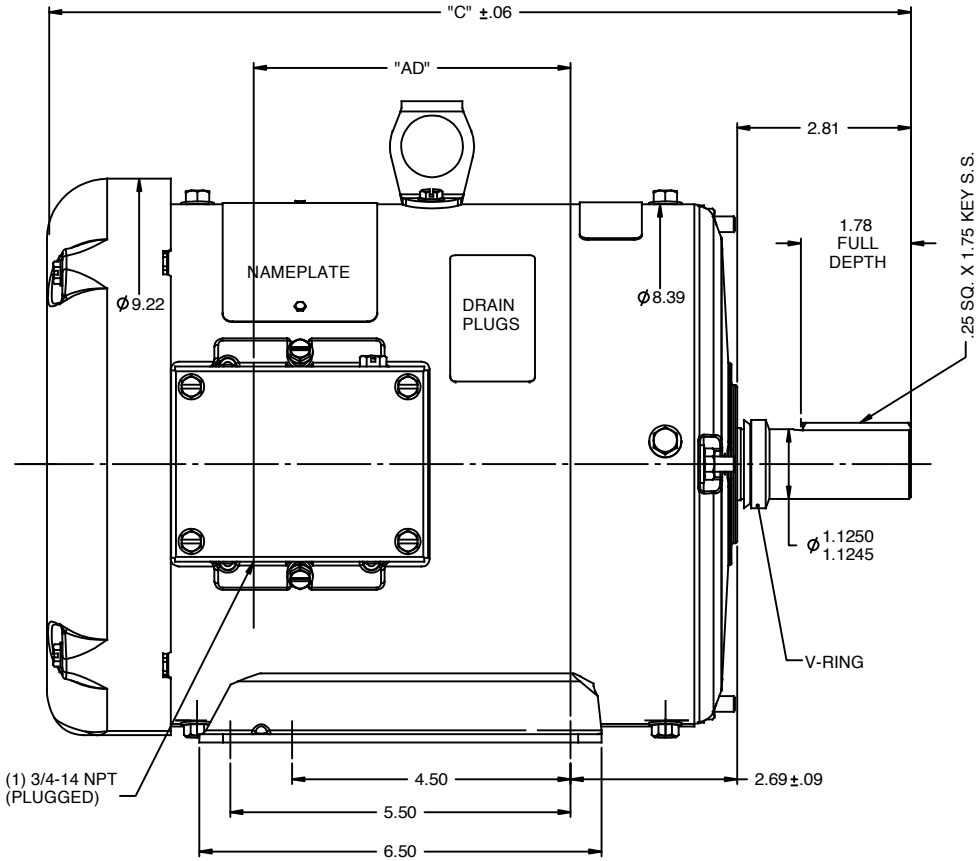

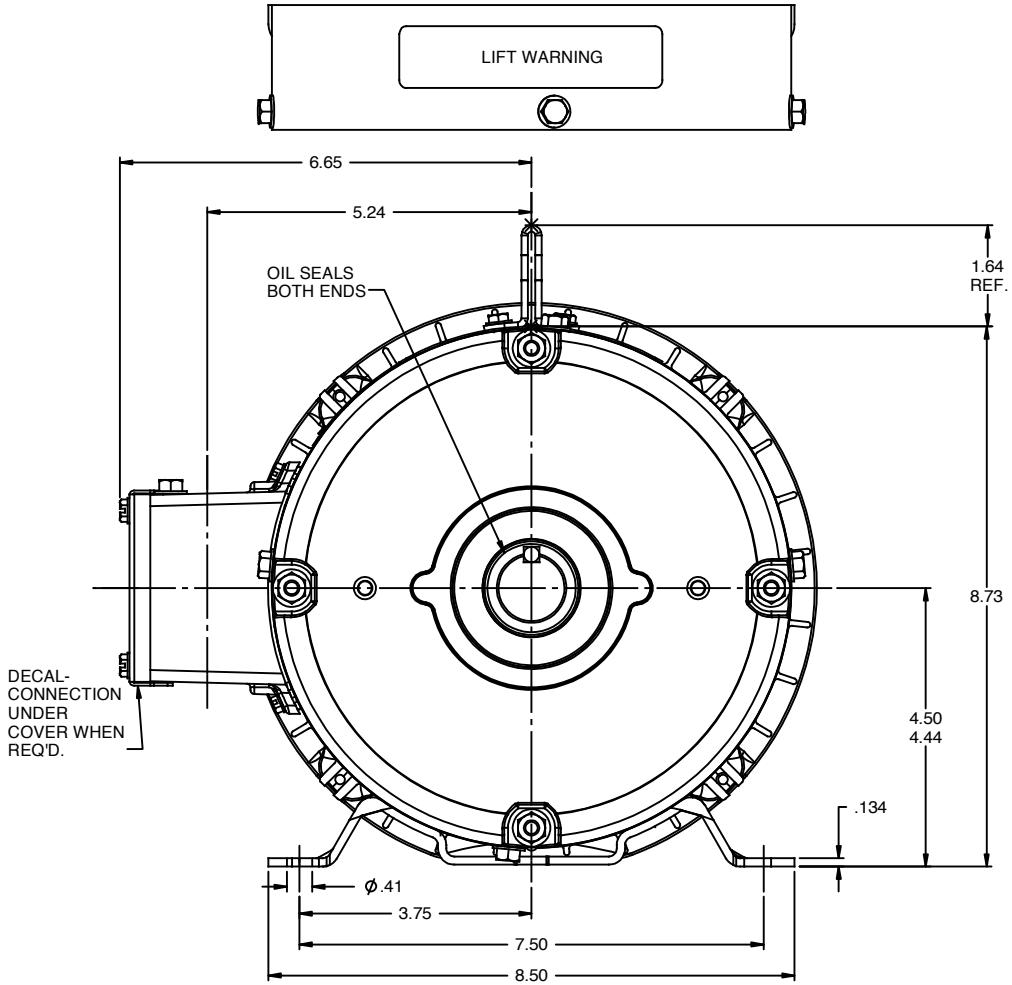

SPECIAL FEATURES:
SHAFT SEALS & V-RING
DRAIN HOLES IN FRAME & CONDUIT BOX
STAINLESS STEEL SHAFT, HARDWARE
& NAMEPLATE
GASKETS THROUGHOUT

DASH NO.	"C"	"AD"
800	13.46	4.62
850	13.96	5.12
900	14.46	5.62
950	14.96	6.12
1000	15.46	6.62
1050	15.96	7.12
1100	16.46	7.62
1150	16.96	8.12

NO	REVISION	BY & DATE	CHK

TOLERANCES UNLESS SPECIFIED

DEC	INCHES
.X	±.1
.XX	±.03
.XXX	±.005
.XXXX	±.0005
ANG	±1/2°

marathon electric

TITLE OUTLINE - 180T FRAME
TEFC- RIGID
MAT'L WASHGUARD
FINISH

DRAWN JD 04/21/2011
CHK
APPR
SCALE 1:2
REF
FMF
PAGE OF

THIRD ANGLE PROJECTION
RFP
PREV
NETWORK FILE NAME 035463ME
SIZE B
DRAWING NO 035463-ME
REV

4/21/2011 11:03:17 AM