SS403832

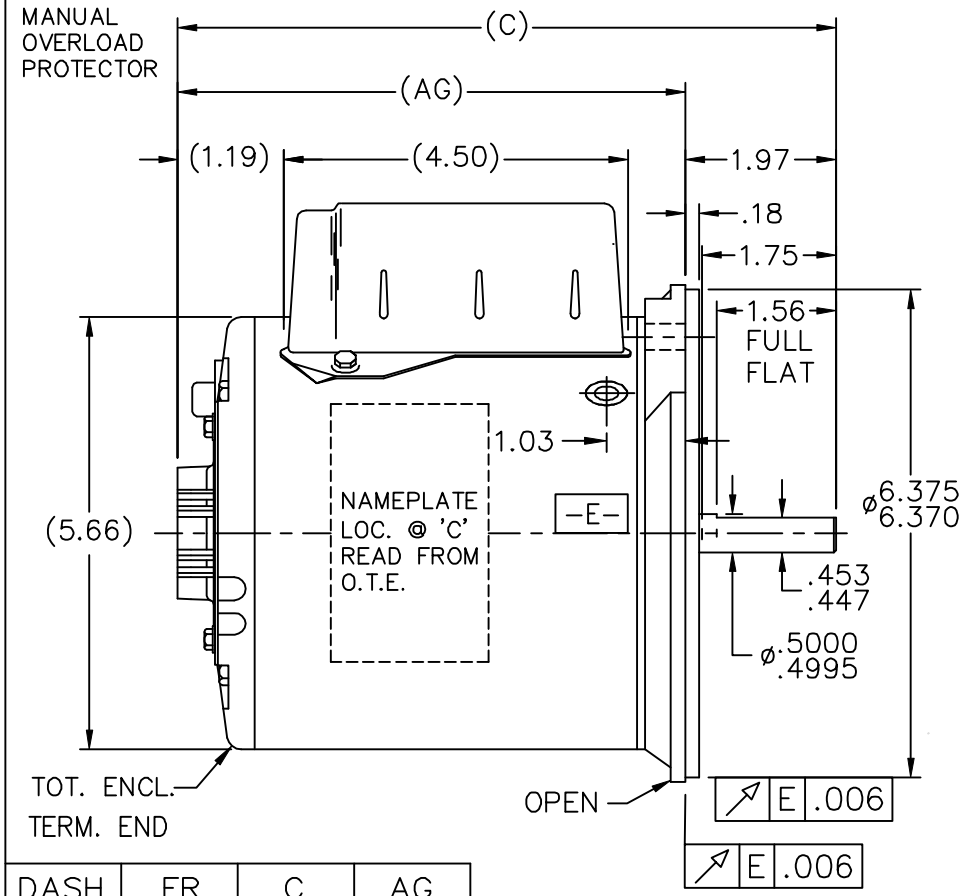

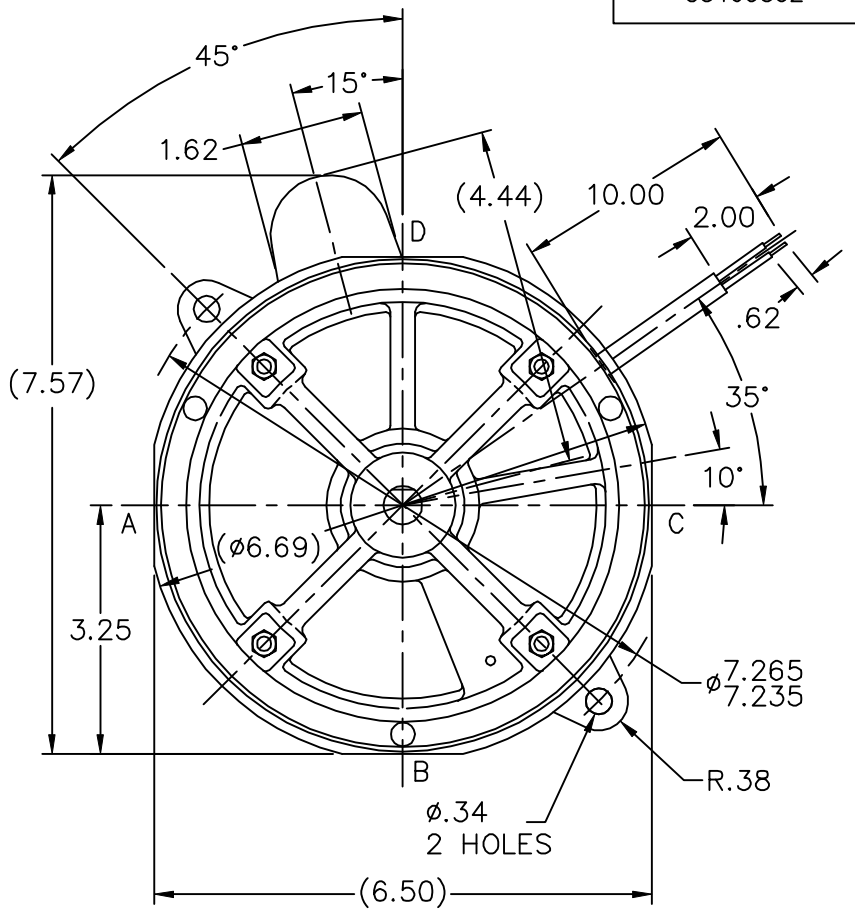

DASH	FR	C	AG
425	48	7.85	5.88
475	48	8.35	6.38
500	48	8.60	6.63
525	48	8.85	6.88

NO.	REVISION	BY & DATE

TOLERANCES UNLESS SPECIFIED

	DEC.	INCHES
	.X	±.1
	.XX	±.03
	.XXX	±.005
	.XXXX	±.0005
CHK	ANG	±7'30"

MARATHON ELECTRIC

TITLE OUTLINE 48 FR.

MAT'L.

FINISH

CAD FILE SS403832

RFP 02-08-2009

DIST WP

DRAWN	SP	02-08-2009
CHK	NB	02-08-2009
APPD	SP	02-08-2009
SCALE	7=16	
REF	SS74431	
FMF	08-2130	
PREV		

SIZE A | DRAWING NO. SS403832 | PAGE OF | REV.

THIS DRAWING IN DESIGN AND DETAIL IS OUR PROPERTY AND MUST NOT BE USED EXCEPT IN CONNECTION WITH OUR WORK ALL RIGHTS OF DESIGN AND INVENTION ARE RESERVED
THIS IS AN ELECTRONICALLY GENERATED DOCUMENT – DO NOT SCALE THIS PRINT