North American Electric, Inc.

PE184TC-2-6C

GENERAL PURPOSE ELECTRIC MOTOR

NEMA PREMIUM EFFICIENCY

THREE PHASE, TOTALLY ENCLOSED FAN COOLED - C-FLANGE W/ FEET

INVERTER DUTY 10:1 CT; 20:1 VT - NEMA MG1 PART 31

Factory Certified for T2B Class I, Division II, Groups A,B,C & D and Class II, Division II, Groups F & G

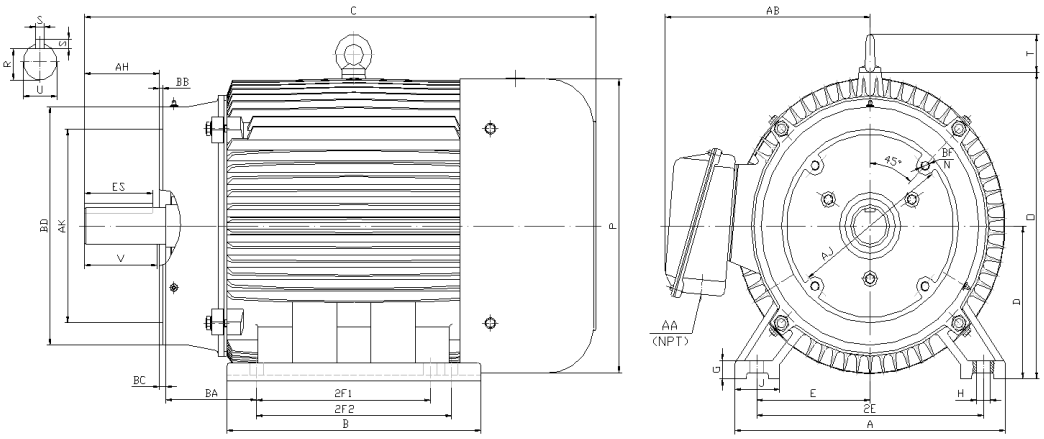

DIMENSIONS																	
HP	RPM	Frame	MOUNTING														
			A	B	C	D	G	H	J	E	2E	2F1	2F2	O	P	T	BA
2	1200	184TC	9.50	8.30	17.10	4.50	0.60	0.41	2.00	3.75	7.50	4.50	5.50	9.10	8.70	1.60	2.75

FLANGE							Shaft Extension, Key Set						Conduit Box		Bearings		Mount
AH	AJ	AK	BB	BC	BD	BF	U	V	R	S	ES	N-W	AA	AB	DE	ODE	
2.62	7.25	8.50	0.25	0.12	9.00	4*1/2-13	1.125	2.5	0.986	0.25	1.78	NA	0.75	7.50	6306-ZZ	6306-ZZ	F1

BEARING LUBRICATION: The bearings come lubricated with Mobil Polyrex EM Polyurea Grease.

ISO9001 CERTIFIED

CE

NEMA Premium

C SP US

PO Box 130 350 Vaiden Drive Hernando, MS 38632-0130
Phone: 662-429-8049 Fax: 662-429-8546 Toll Free: 800-884-0404 www.naemotors.com

North American Electric, Inc.

PE184TC-2-6C

GENERAL PURPOSE ELECTRIC MOTOR

NEMA PREMIUM EFFICIENCY

THREE PHASE, TOTALLY ENCLOSED FAN COOLED - C-FLANGE W/ FEET

INVERTER DUTY 10:1 CT; 20:1 VT - NEMA MG1 PART 31

Factory Certified for T2B Class I, Division II, Groups A,B,C & D and Class II, Division II, Groups F & G

PERFORMANCE DATA

HP	RPM	Frame	Voltage	Frequency (Hz)	Full Load S.F.	Insulation Class	NEMA Design	Slip (%)	NEMA Code	Enclosure Type	IP Rating	Max. Ambient
2	1180	184TC	208-230/460	60	1.15	F	C	1.7	L	TEFC	55	40° C

Amps (460V)		Efficiency (%)				Power Factor			Torque (ft-lb)			DE Bearing	ODE Bearing	Connection	Weight (lbs.)
FLA	LRA	100%	75%	50%	Min.	100%	75%	50%	FLT	LRT %	BDT %				
3.2	25.0	88.5	88.0	86.4	86.5	0.650	0.600	0.460	9.1	250	320	6306-ZZ	6306-ZZ	9 Lead 2Y/Y	94

NAME PLATE

North American Electric, Inc.

NEMA Premium

INVERTER DUTY 20:1 VT; 10:1 CT

CAT NO:	PE184TC-2-6C			FRAME	184TC			PHASE	3		
HZ	60	S.F.	1.15	HZ	50	S.F.	1.0	ENCL	TEFC	IP	55
HP	2	RPM	1180	HP	2	RPM	975	DUTY	CONT	DES	C
VOLTS	208-230/460			VOLTS	190/380			AMB	40° C	INS	F
FLA	6.6 - 6.4 / 3.2			FLA	7.0/3.5			DE BEARING	6306-ZZ		
CODE	L	P.F.	0.65	CODE	J	P.F.	0.75	ODE BEARING	6306-ZZ		
EFF	88.5	MIN	86.5	EFF	86.5	MIN	84.5	LUB:	Mobil Polyrex EM		
MOTOR WEIGHT	94	LBS		CONNECTION	9 Lead 2Y/Y			SER NO			

General purpose use on industrial machinery installed in damp, dusty or dirty environments.

Hernando, Mississippi

ISO9001 CERTIFIED CE C SP US CC 082A

CONNECTION DIAGRAMS

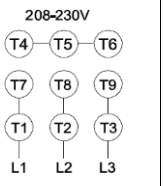

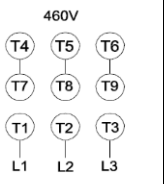

APPLICATIONS:

General purpose use on pumps, fans, blowers, compressors, conveyors, material handling and other industrial machinery installed in damp, dusty or dirty environments.

PO Box 130 350 Vaiden Drive Hernando, MS 38632-0130
Phone: 662-429-8049 Fax: 662-429-8546 Toll Free: 800-884-0404 www.naemotors.com