North American Electric

PE587UZ-600-4C

CRUSHER DUTY MOTOR

HIGH TORQUE / PREMIUM EFFICIENCY DESIGN

TOTALLY ENCLOSED FAN COOLED

HEAVY DUTY CAST IRON CONSTRUCTION

Factory Certified for T2B Class I, Division II, Groups A,B,C & D and Class II, Division II, Groups F & G

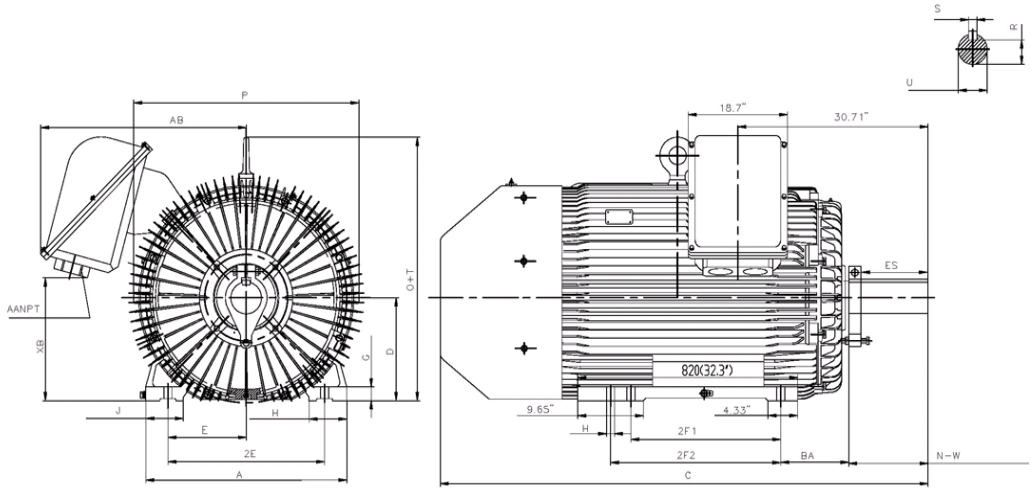

DIMENSIONS

HP	RPM	Frame	MOUNTING														
			A	B	C	D	G	H	J	E	2E	2F1	2F2	O	P	T	BA
600	1800	587UZ	29.53	32.38	71.65	14.50	1.97	1.18	5.51	11.50	23.00	22.00	25.00	31.10	31.89	5.88	10.00

Shaft Extension, Key Set						Conduit Box		Bearings		Mount
U	V	R	S	ES	N-W	AA	AB	DE	ODE	
4.375	11.25	3.817	1.00	10.00	11.63	2 X 3"	28.15	NU324	6319	F1

BEARING LUBRICATION: The bearings come lubricated with Mobil Polyrex EM Polyurea Grease. It is recommended that you add some additional lubrication when the motor is installed.

Three options (brands) for suitable lubrication include, but are not limited to, the following:

1.) Mobil Polyrex EM
2.) Citco Polyurea MP
3.) Conoco Phillips Polytac EP

ISO9001 CERTIFIED

CE

C US

PO Box 130 350 Vaiden Drive Hernando, MS 38632-0130
Phone: 662-429-8049 Fax: 662-429-8546 Toll Free: 800-884-0404 www.naemotors.com

North American Electric

PE587UZ-600-4C

CRUSHER DUTY MOTOR
HIGH TORQUE / PREMIUM EFFICIENCY DESIGN
TOTALLY ENCLOSED FAN COOLED
HEAVY DUTY CAST IRON CONSTRUCTION
Factory Certified for T2B Class I, Division II, Groups A,B,C & D and Class II, Division II, Groups F & G

PERFORMANCE DATA

HP	RPM	Frame	Voltage	Frequency (Hz)	Full Load S.F.	Insulation Class	NEMA Design	Slip (%)	NEMA Code	Enclosure Type	IP Rating	Max. Ambient
600	1790	587UZ	460	60	1.15	F	C	0.6	E	TEFC	55	40° C

Amps (460V)		Efficiency (%)				Power Factor			Torque (ft-lb)			DE Bearing	ODE Bearing	Connection	Weight (lbs.)
FLA	LRA	100%	75%	50%	Min.	100%	75%	50%	FLT	LRT %	BDT %				
669.6	3625	96.2	95.8	95.4	95.4	0.864	0.843	0.796	1762	200	250	NU324	6319	12 Lead △	5947

NAME PLATE

North American Electric

HIGH EFFICIENCY DESIGN

CRUSHER DUTY MOTOR

CONNECTION DIAGRAMS

CAT NO: PE587UZ-600-4C	FRAME 587UZ	PHASE 3	
DE BRG NU324	ODE BRG 6319	CONN. 12 Lead △	
MAX AMB. 40° C	INS. CLASS F	RATING CONT	WEIGHT 5947
LUBRICATION Mobil Polyrex EM	SER		

60 HERTZ DATA				50 HERTZ DATA			
HP 600	RPM 1790	HP 600	RPM 1491				
VOLTS 460		VOLTS 380					
F.L. AMPS 669.6		F.L. AMPS 810.6					
S.F. AMPS 770.0		S.F. AMPS 810.6					
S.F. 1.15 DESIGN C CODE E		S.F. 1.0 DESIGN C CODE F					
NEMA NOM.EFF. 96.2 %	NOM. P.F. 0.864	NEMA NOM.EFF. 95.1 %	NOM. P.F. 0.864				
NEMA MIN.EFF. 95.4 %	MAX. KVAR 148.0	NEMA MIN.EFF. 94.4 %	MAX. KVAR 158.4				

460V

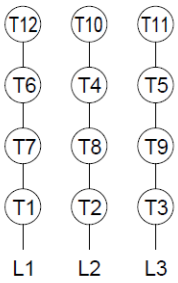

Designed specifically for use on crushing and pulverizing equipment and other equipment requiring extremely high starting torques and breakdown torques.

ISO9001 CERTIFIED CE C SA US CC041B

Hernando, MS 38632

232051

APPLICATIONS:

Special purpose use on crushing and pulverizing equipment and other industrial equipment requiring extremely high starting torques and breakdown torques.

PO Box 130 350 Vaiden Drive Hernando, MS 38632-0130
Phone: 662-429-8049 Fax: 662-429-8546 Toll Free: 800-884-0404 www.naemotors.com