Uncontrolled Copy

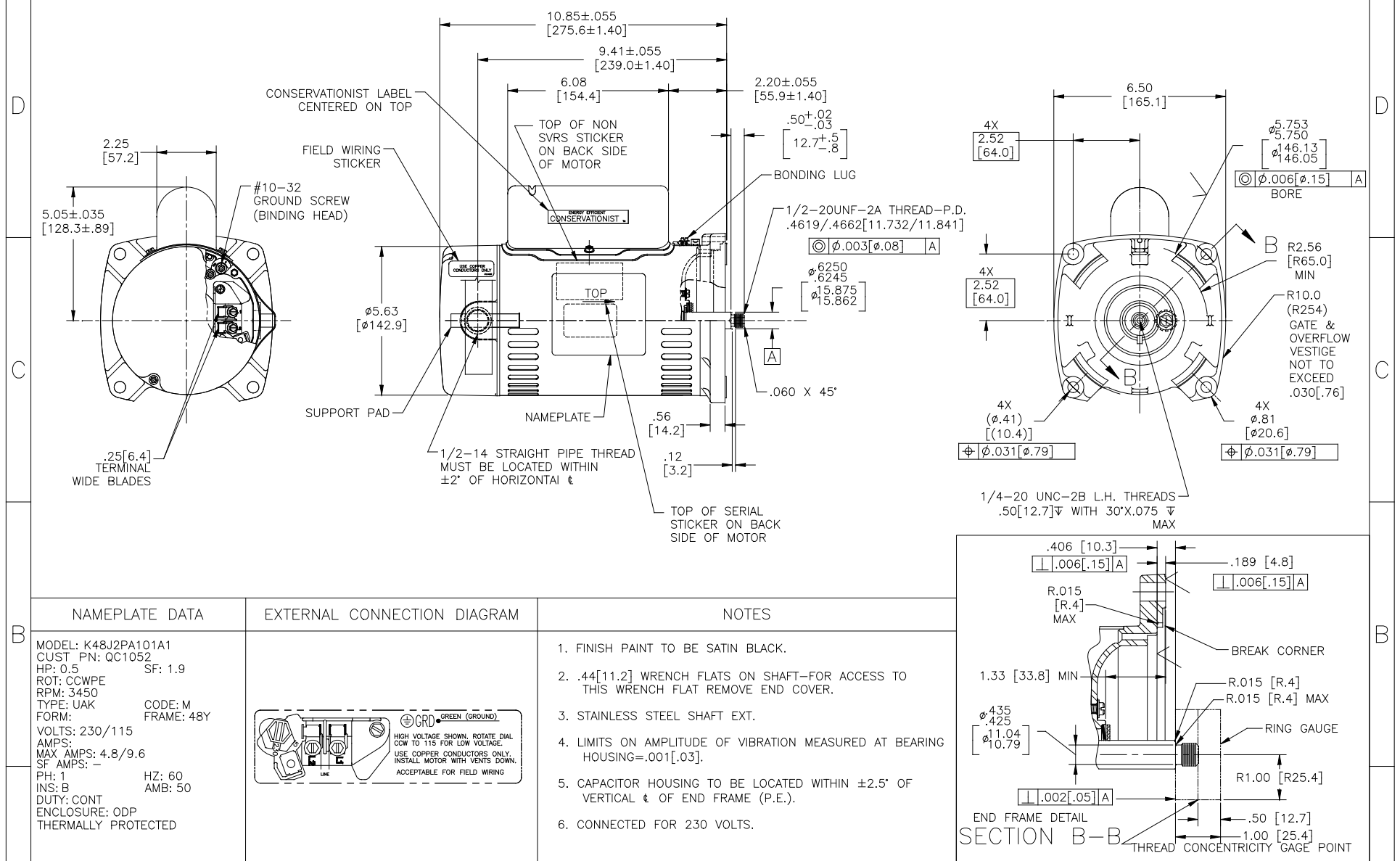

NAMEPLATE DATA

MODEL: K48J2PA101A1
CUST PN: QC1052
HP: 0.5 SF: 1.9
ROT: CCWPE
RPM: 3450
TYPE: UAK CODE: M
FORM: FRAME: 48Y
VOLTS: 230/115
AMPS:
MAX AMPS: 4.8/9.6
SF AMPS: –
PH: 1 HZ: 60
INS: B AMB: 50
DUTY: CONT
ENCLOSURE: ODP
THERMALLY PROTECTED

EXTERNAL CONNECTION DIAGRAM

NOTES

1. FINISH PAINT TO BE SATIN BLACK.
2. .44[11.2] WRENCH FLATS ON SHAFT–FOR ACCESS TO THIS WRENCH FLAT REMOVE END COVER.
3. STAINLESS STEEL SHAFT EXT.
4. LIMITS OF AMPLITUDE OF VIBRATION MEASURED AT BEARING HOUSING=.001[.03].
5. CAPACITOR HOUSING TO BE LOCATED WITHIN ±2.5° OF VERTICAL ℄ OF END FRAME (P.E.).
6. CONNECTED FOR 230 VOLTS.

PERFORMANCE CURVE		APPROVED SAMPLE	
K48J2W1			
UL COMPONENT		CSA	
FILE#	CCN#	FILE#	GUIDE#
E25022	XEWR2	LR43341	4211−01
CUSTOMER	DISTRIBUTION SERVICES		

DRAWING REVISION	REVISION BY	DATE
E	F.NAVARRO	09−27−2016
ECO	APPROVED BY	DATE
ECO−019446	–	–
ECO DESCRIPTION		
SEE ECO		

COPYRIGHT REGAL BELOIT AMERICA, INC. ALL RIGHTS RESERVED. PROPRIETARY AND CONFIDENTIAL INFORMATION – THIS DOCUMENT IS THE PROPERTY OF REGAL BELOIT AMERICA, INC.("OWNER") AND CONTAINS OWNER'S PROPRIETARY INFORMATION. ANY PERSON, CORPORATION OR OTHER FIRM RECEIVING IT IS DEEMED, BY RECEIVING IT, TO AGREE THAT IT AND/OR ANY PART OF IT, SHALL NOT BE DISCLOSED TO OTHERS FOR ANY PURPOSE NOR COPIED IN WHOLE OR IN PART WITHOUT THE WRITTEN AS EXPRESSLY APPROVED IN WRITING IN ADVANCE BY OWNER. THIS DOCUMENT SHALL BE RETURNED TO OWNER UPON REQUEST. IT MAY BE SUBJECT TO CERTAIN RESTRICTIONS UNDER APPLICABLE EXPORT CONTROL LAWS AND REGULATIONS.

TOLERANCES UNLESS OTHERWISE SPECIFIED

DEC.	INCH	mm	ANGLE
.X	±0.1	[±2.5]	±0.5°
.XX	±0.02	[±0.51]	
.XXX	±0.005	[±0.127]	
.XXXX	±0.0005	[±0.0127]	

REMOVE BURRS & BREAK SHARP EDGES .003/.015 [.076/.381]
CORNER FILLETS .02 [.51]
MACHINED SURFACES 125/ INCH 3.3/ mm
mm SHOWN IN [BRACKETS]

DRAWN BY: JLG
DATE: 05−12−2009
APPROVED BY: –
DATE: –
REFERENCE: –
THIRD ANGLE PROJECTION

Regal Beloit America, Inc.

DESCRIPTION: MODEL−PFHP−48FR OUTLINE
MATERIAL: –
PROCESS/FINISH: –
SIZE: C
DWG NO: QC1052
SHEET: 1