Uncontrolled Copy

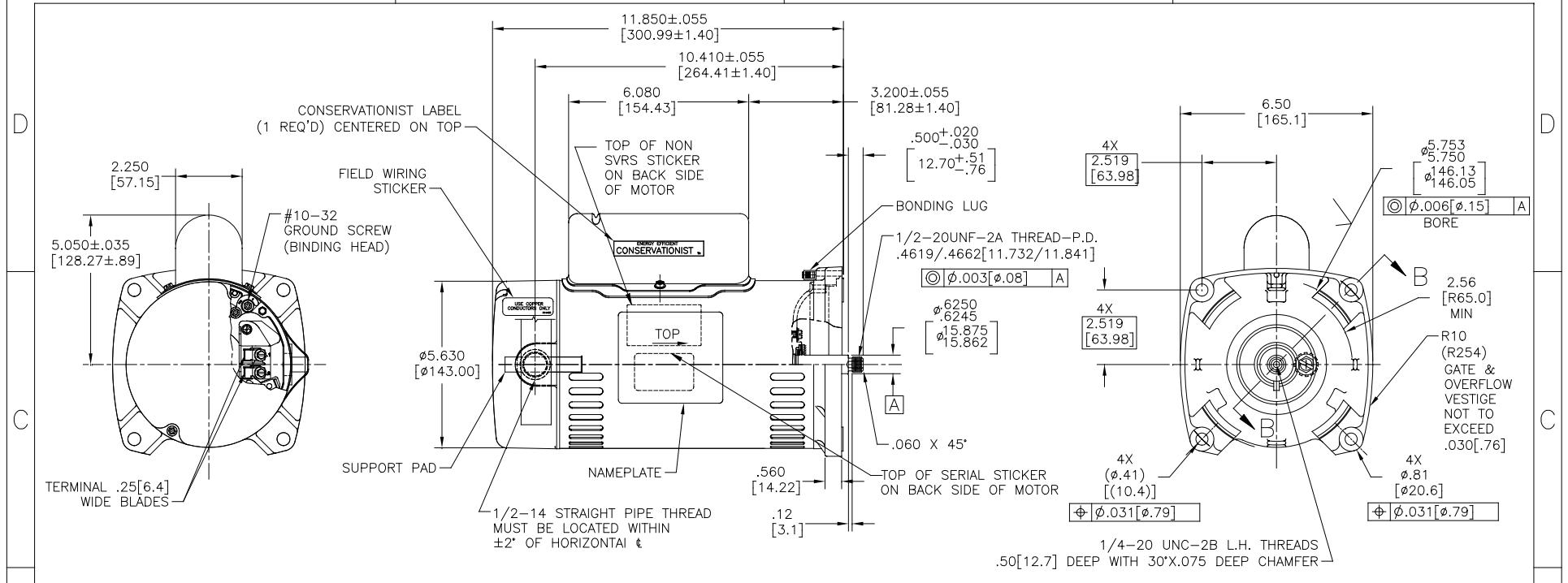

NAMEPLATE DATA

MODEL: K48L2PA101A1
CUST PN: QC1102
HP: 1.0 SF: 1.65
ROT: CCWPE
RPM: 3450
TYPE: UAK CODE: L
FORM: FRAME: 48Y
VOLTS: 208–230/115
AMPS:
MAX AMPS: 8.0/16.0
SF AMPS:
PH: 1 HZ: 60
INS: B AMB: 50℃
DUTY: CONT
ENCLOSURE: ODP
THERMALLY–PROTECTED

EXTERNAL CONNECTION DIAGRAM

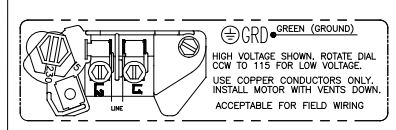

NOTES

1. FINISH PAINT TO BE SATIN BLACK.
2. .44[11.2] WRENCH FLATS ON SHAFT–FOR ACCESS TO THIS WRENCH FLAT REMOVE END COVER.
3. LIMITS ON AMPLITUDE OF VIBRATION MEASURED AT BEARING HOUSING=.001[.03].
4. CAPAC. HOUSING TO BE LOCATED WITHIN ±2.5° OF VERTICAL q OF END FRAME (P.E.).
5. CONNECTED FOR 230 VOLTS.
6. REF. MOTOR NUMBER:626610–007

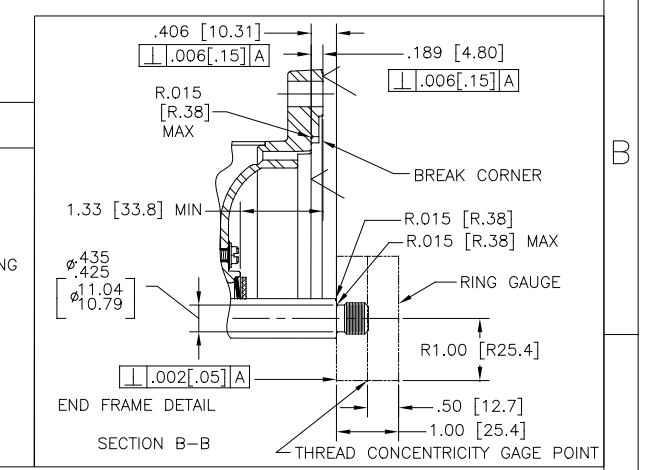

PERFORMANCE CURVE		APPROVED SAMPLE	
K48L2W1			
UL COMPONENT		CSA	
FILE#	CCN#	FILE#	GUIDE#
E25022	XEWR2	LR43341	4211–01
CUSTOMER	DISTRIBUTION SERVICES		

DRAWING REVISION	REVISION BY	DATE
F	R.LIAN	09–30–2016
ECO	APPROVED BY	DATE
ECO–0109281	Q.HE	09–30–2016
ECO DESCRIPTION		
SEE ECO		

COPYRIGHT REGAL BELOIT AMERICA, INC. ALL RIGHTS RESERVED.
PROPRIETARY AND CONFIDENTIAL INFORMATION – THIS DOCUMENT IS THE PROPERTY OF REGAL BELOIT AMERICA, INC. ("OWNER") AND CONTAINS OWNER'S PROPRIETARY INFORMATION. ANY PERSON, CORPORATION OR OTHER FIRM RECEIVING IT IS DEEMED, BY RECEIVING IT, TO AGREE THAT IT, AND/OR ANY PART OF IT, SHALL NOT BE DISCLOSED TO ANY PERSON, CORPORATION OR OTHER ENTITY, DUPLICATED, AND/OR USED EXCEPT AS AUTHORIZED IN WRITING BY OWNER. ALL RIGHTS GRANTED TO OWNER HEREUNDER SHALL BE RETURNED TO OWNER UPON REQUEST. IT MAY BE SUBJECT TO CERTAIN RESTRICTIONS UNDER APPLICABLE EXPORT CONTROL LAWS AND REGULATIONS.

TOLERANCES UNLESS OTHERWISE SPECIFIED

DEC.	INCH	mm	ANGLE
.X	±0.1	[±0.5]	±0.5°
.XX	±0.02	[±0.13]	
.XXX	±0.005	[±0.013]	
.XXXX	±0.0005	[±0.0013]	

REMOVE BURRS & BREAK SHARP EDGES .003/.015 [.08/.38]
CORNER FILLETS .02 [.5]
MACHINED SURFACES 125/ INCH 3.2/ mm
mm SHOWN IN [BRACKETS]

DRAWN BY: JLG
DATE: 05–12–2009
APPROVED BY:
DATE:
REFERENCE –
THIRD ANGLE PROJECTION

Regal Beloit America, Inc.

DESCRIPTION: MODEL–PFHP–48FR OUTLINE

MATERIAL –
PROCESS/FINISH –

SIZE	DWG NO	SHEET
C	QC1102	1