169859-00ME

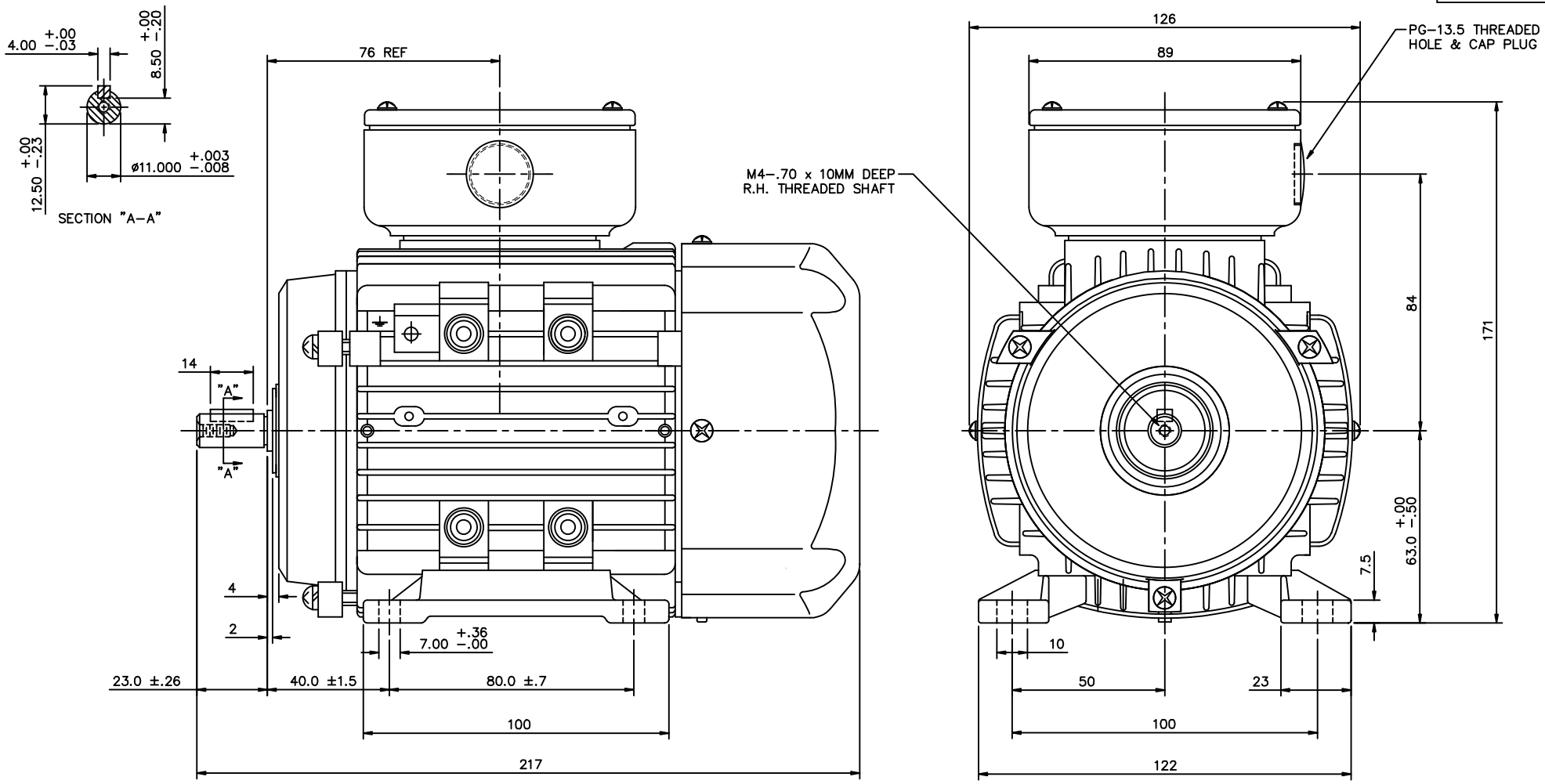


| | | | | | | | |
|---|---|---|---|---|---|---|---|
| | | | | TOLERANCES UNLESS SPECIFIED | | MARATHON ELECTRIC | DRAWN ADS 01/18/02 |
| | | | | DEC. | METRIC | | CHK |
| | | | | .X | ±2.5 | | APPD |
| | | | | .XX | ±.76 | TITLE METRIC MOTOR OUTLINE, IMB3 IEC-63 FRAME RIGID MOUNT | SCALE 1=1.25 |
| | | | | .XXX | ±.127 | | REF OSVC-300-554 |
| | | | | .XXXX | ±.0127 | MAT'L. ALUMINUM | FMF |
| NO. | REVISION | BY & DATE | CHK | ANG | ±7'30" | FINISH | PREV |

THIS DRAWING IN DESIGN AND DETAIL IS OUR PROPERTY AND MUST NOT BE USED EXCEPT IN CONNECTION WITH OUR WORK ALL RIGHTS OF DESIGN AND INVENTION ARE RESERVED
THIS IS AN ELECTRONICALLY GENERATED DOCUMENT – DO NOT SCALE THIS PRINT

RFP
DIST
CAD FILE 16985900ME
SIZE B
DRAWING NO. 169859-00ME
REV.

3/12/2010 1:20:23 PM