169861-00ME

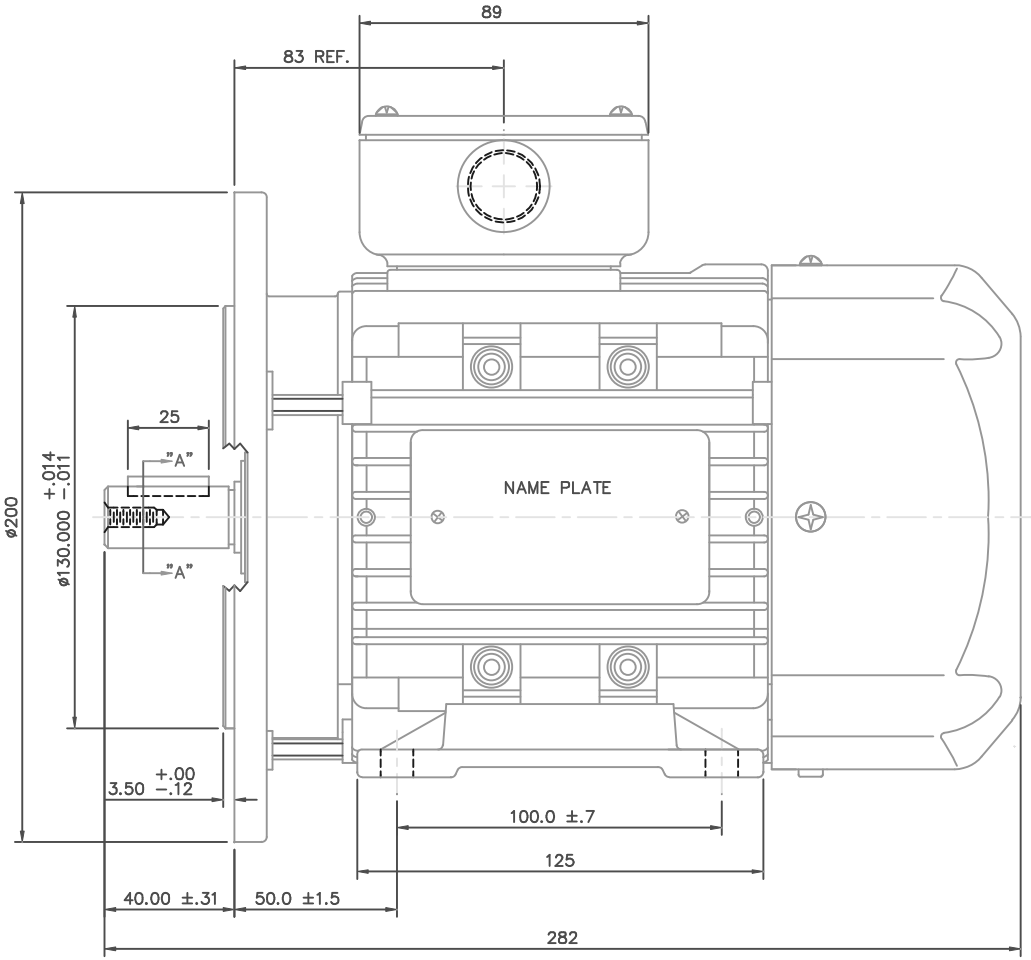

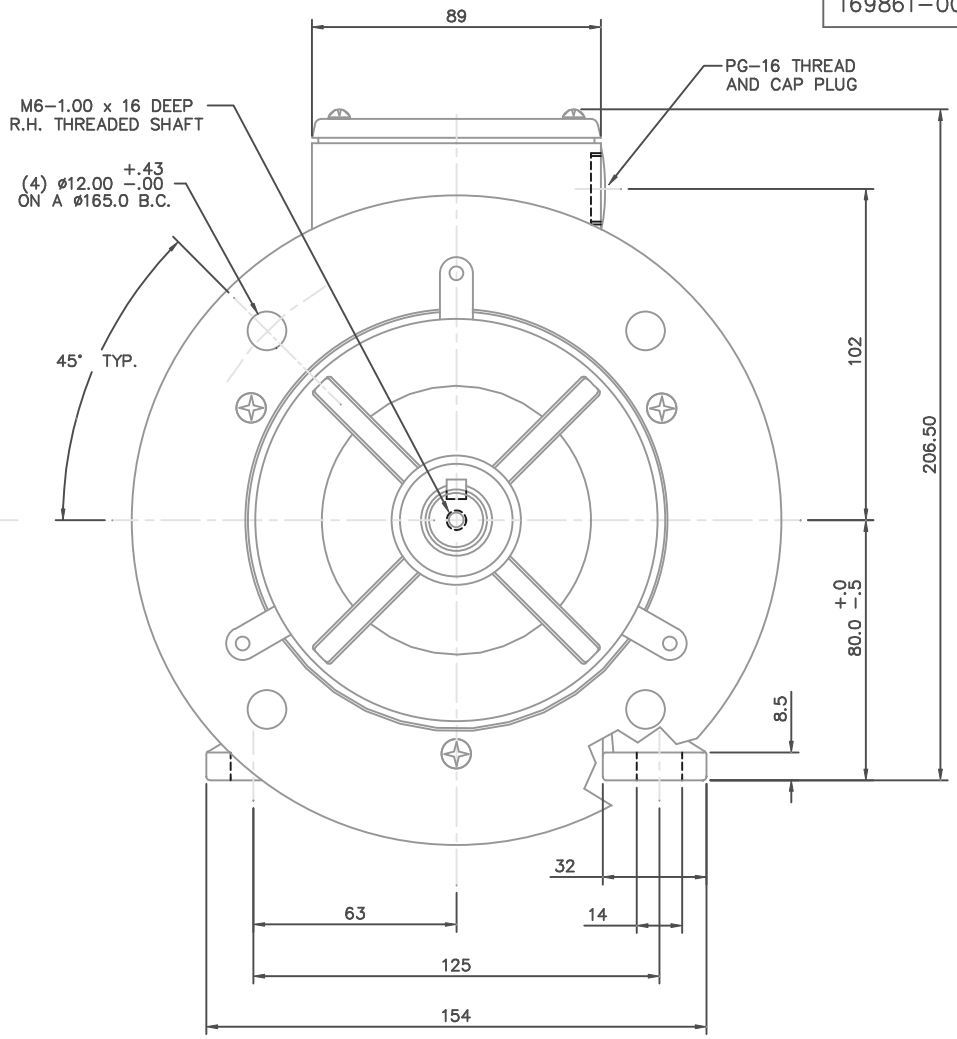

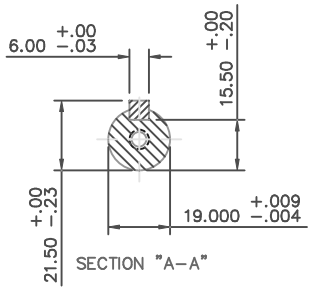

NO.	REVISION	BY & DATE	CHK

TOLERANCES UNLESS SPECIFIED

DEC.	INCHES
.X	±.1
.XX	±.03
.XXX	±.005
.XXXX	±.0005
ANG	±1/2°

MARATHON ELECTRIC

TITLE: METRIC OUTLINE, IMB35
IEC-80 FRAME TEFC RIGID W/B5 FLANGE

MAT'L. ALUMINUM

FINISH

CAD FILE 16986900me

RFP

DIST

DRAWN CTO 07-07-2004
CHK
APPD
SCALE 1=1.5
REF 0SVC-300-552
FMF
PREV

SIZE B | DRAWING NO. 169861-00ME | REV.

THIS DRAWING IN DESIGN AND DETAIL IS OUR PROPERTY AND MUST NOT BE USED EXCEPT IN CONNECTION WITH OUR WORK ALL RIGHTS OF DESIGN AND INVENTION ARE RESERVED
THIS IS AN ELECTRONICALLY GENERATED DOCUMENT – DO NOT SCALE THIS PRINT