Uncontrolled Copy

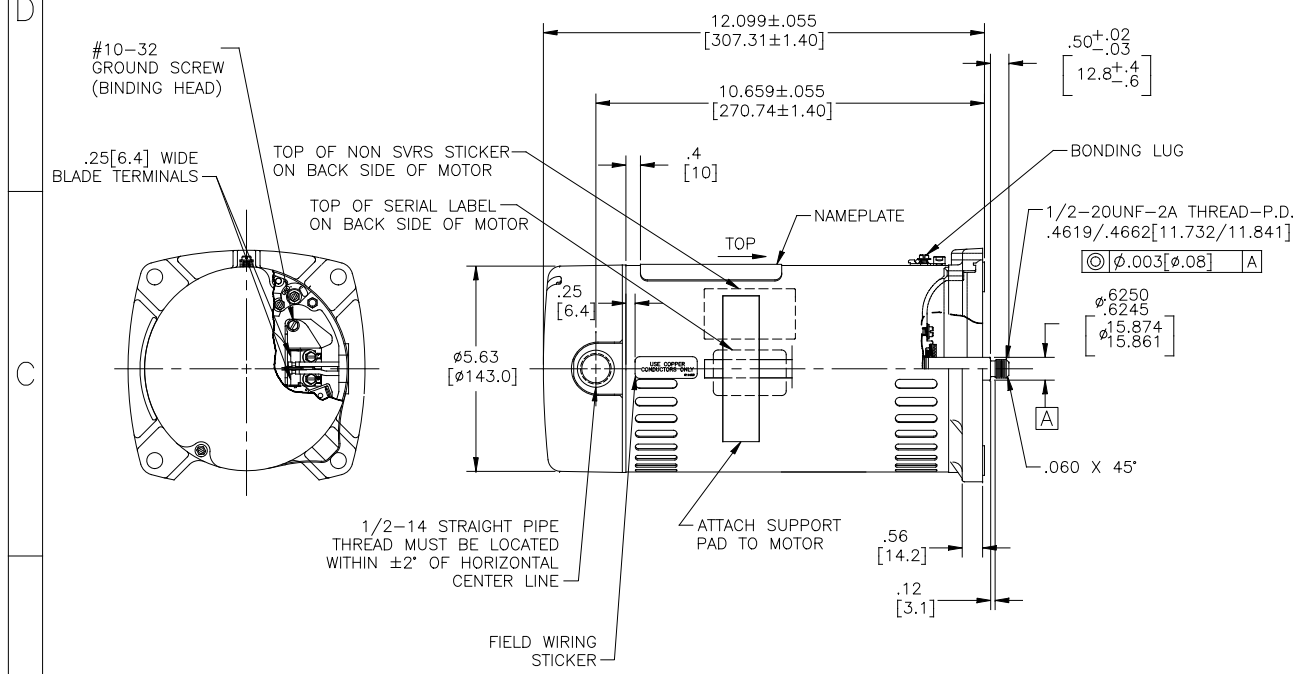


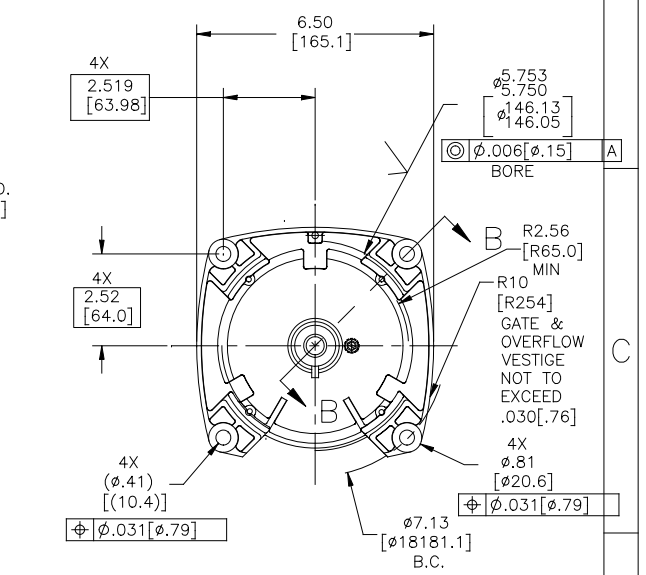


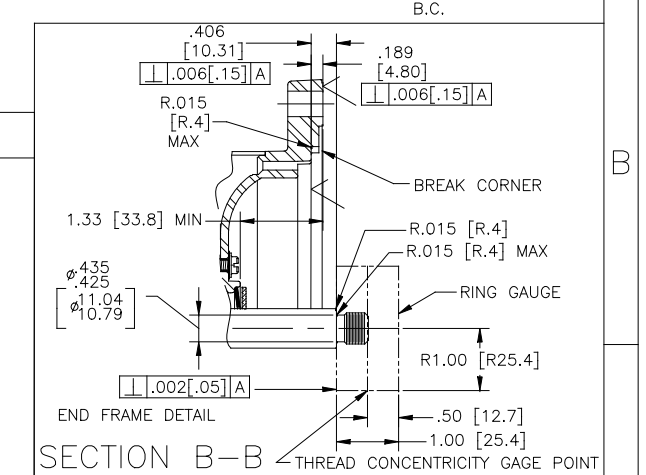


## NAMEPLATE DATA

MODEL: C48K2PA105C4
CUST PN: SQ1072
HP: 0.75 SF: 1.65
ROT: CCWPE
RPM: 3450
TYPE: UAC CODE: L
FORM: FRAME: 48 Y
VOLTS: 230/115
AMPS:
MAX AMPS: 7.6/15.3
SF AMPS: 7.3/14.6
PH: 1 HZ: 60
INS: B AMB: 50°C
DUTY: CONT
ENCLOSURE: ODP
THERMALLY PROTECTED

## EXTERNAL CONNECTION DIAGRAM

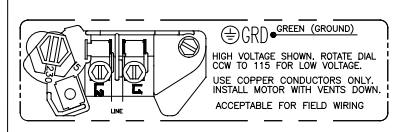


## NOTES

1. FINISH PAINT TO BE SATIN BLACK.
2. .44[11.2] WRENCH FLATS ON SHAFT–FOR ACCESS TO THIS WRENCH FLAT REMOVE END COVER.
3. STAINLESS STEEL SHAFT EXT.
4. LIMITS ON AMPLITUDE OF VIBRATION MEASURED AT BEARING HOUSING = .001.
5. CONNECTED FOR 230 VOLTS. QUICK VOLTAGE CHANGE DIAL INCLUDED ON THE TERMINAL BOARD.
6. SUPPORT PAD TO BE PACKED WITH EACH MOTOR

| PERFORMANCE CURVE | | APPROVED SAMPLE | |
|---|---|---|---|
| C48K2W52 | | | |
| UL COMPONENT | | CSA | |
| FILE# | CCN# | FILE# | GUIDE# |
| E25022 | XEWR2 | LR43341 | 4211–01 |
| CUSTOMER | DISTRIBUTION SERVICES | | |

| DRAWING REVISION | REVISION BY | DATE |
|---|---|---|
| L | F.NAVARRO | 09–27–2016 |
| ECO | APPROVED BY | DATE |
| ECO–0109446 | – | – |
| ECO DESCRIPTION | | |
| SEE ECO | | |

COPYRIGHT REGAL BELOIT AMERICA, INC. ALL RIGHTS RESERVED.
PROPRIETARY AND CONFIDENTIAL INFORMATION – THIS DOCUMENT IS THE PROPERTY OF REGAL BELOIT AMERICA, INC. ("OWNER") AND CONTAINS OWNER'S PROPRIETARY INFORMATION. ANY PERSON, CORPORATION OR OTHER FIRM RECEIVING IT IS DEEMED, BY RECEIVING IT, TO AGREE THAT IT, AND/OR ANY PART OF IT, SHALL NOT BE DISCLOSED TO OTHERS FOR MANUFACTURING OR OTHER PURPOSES, OR OTHERWISE USED EXCEPT AS EXPRESSLY APPROVED IN WRITING BY OWNER. THIS DOCUMENT SHALL BE RETURNED TO OWNER UPON REQUEST. IT MAY BE SUBJECT TO CERTAIN RESTRICTIONS UNDER APPLICABLE EXPORT CONTROL LAWS AND REGULATIONS.

TOLERANCES UNLESS OTHERWISE SPECIFIED

| DEC. | INCH | mm | ANGLE |
|---|---|---|---|
| .X | ±0.1 | [±2.5] | ±0.5° |
| .XX | ±0.02 | [±0.51] | |
| .XXX | ±0.005 | [±0.127] | |
| .XXXX | ±0.0005 | [±0.0127] | |

REMOVE BURRS & BREAK SHARP EDGES .003/.015 [.076/.381]
CORNER FILLETS .02 [.51]
MACHINED SURFACES 125/ 3.2/
INCH mm
mm SHOWN IN [BRACKETS]

DRAWN BY: JLG
DATE: 05–12–2009
APPROVED BY:
DATE:
REFERENCE
THIRD ANGLE PROJECTION

Regal Beloit America, Inc.

DESCRIPTION: MODEL–PFHP–48FR OUTLINE

MATERIAL | PROCESS/FINISH

SIZE C | DWG NO SQ1072 | SHEET 1