Uncontrolled Copy

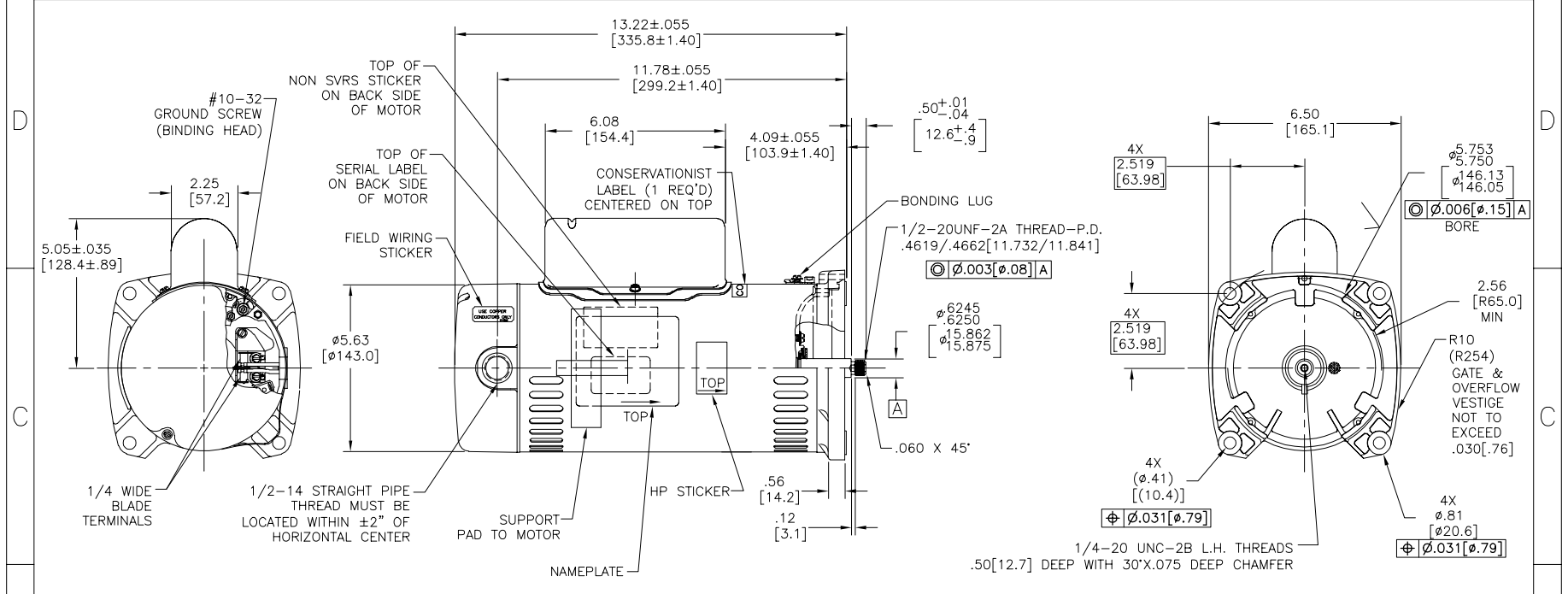

NAMEPLATE DATA	EXTERNAL CONNECTION DIAGRAM	NOTES
MODEL: K48M2PA105C4 CUST PN: SQ1152 HP: 1.5 SF: 1.47 ROT: CCWPE RPM: 3450 TYPE: UAK CODE: K FORM: FRAME: 48 Y VOLTS: 230 AMPS: MAX AMPS: 10.4 SF AMPS: – PH: 1 HZ: 60 INS: B AMB: 50°C DUTY: CONT ENCLOSURE: ODP THERMALLY PROTECTED	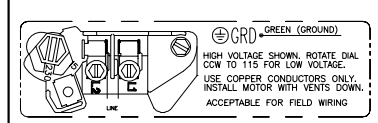 	1. FINISH PAINT TO BE SATIN BLACK. 2. .44[11.2] WRENCH FLATS ON SHAFT–FOR ACCESS TO THIS WRENCH FLAT REMOVE END COVER. 3. STAINLESS STEEL SHAFT EXT. 4. LIMITS ON AMPLITUDE OF VIBRATION MEASURED AT BEARING HOUSING = .001. 5. CAPACITOR HOUSING TO BE LOCATED WITHIN ±2.5° OF VERTICAL ℄ OF END FRAME (P.E.). 6. CONNECTED FOR 230 VOLTS.

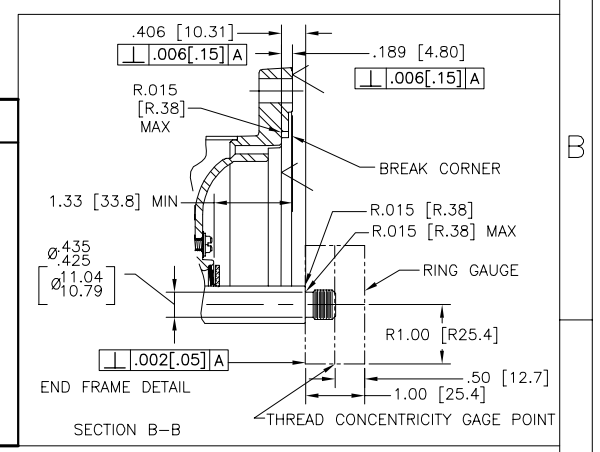

PERFORMANCE CURVE		APPROVED SAMPLE	
K48M2W2			
UL COMPONENT		CSA	
FILE#	CCN#	FILE#	GUIDE#
E25022	XEWR2	LR43341	4211–01
CUSTOMER	DISTRIBUTION SERVICES		

DRAWING REVISION	REVISION BY	DATE
C	F.NAVARRO	02–28–2014
ECO	APPROVED BY	DATE
0045866	G.ALVIDREZ	02–28–2014
ECO DESCRIPTION		
SEE ECO		

COPYRIGHT REGAL BELOIT AMERICA, INC. ALL RIGHTS RESERVED.
PROPRIETARY DOCUMENT. THE INFORMATION CONTAINED IN THIS DOCUMENT IS THE PROPERTY OF REGAL BELOIT AMERICA, INC. ("COMPANY") AND CONTAINS OWNER'S PROPRIETARY INFORMATION. ANY PERSON, CORPORATION OR OTHER FIRM RECEIVING IT IS DEEMED, BY ACCEPTING IT, TO AGREE THAT IT, AND/OR ANY PART OF IT, SHALL NOT BE DISCLOSED TO ANY PERSON, CORPORATION OR OTHER ENTITY, DUPLICATED, AND/OR USED, EXCEPT AS EXPRESSLY PERMITTED IN WRITING BY COMPANY. ALL DOCUMENTS, DATA, DRAWINGS, SHALL BE RETURNED TO OWNER UPON REQUEST. IT MAY BE SUBJECT TO CERTAIN RESTRICTIONS UNDER APPLICABLE EXPORT CONTROL LAWS AND REGULATIONS.

TOLERANCES UNLESS OTHERWISE SPECIFIED

DEC.	INCH	mm	ANGLE
.X	±0.1	±2.5	±0.5°
.XX	±0.02	±0.51	
.XXX	±0.005	±0.127	
.XXXX	±0.0005	±0.0127	

REMOVE BURRS & BREAK SHARP EDGES .005/.015 (.076/.381)
CORNER FILLETS .02 (.51)
MACHINED SURFACES 125/ INCH 3.2/ mm
mm SHOWN IN [BRACKETS]

DRAWN BY: J.G.
DATE: 05–12–2009
APPROVED BY:
DATE:
PROCESS/FINISH
THIRD ANGLE PROJECTION

Regal Beloit America, Inc.

DESCRIPTION: MODEL–PFHP–48FR OUTLINE

MATERIAL

SIZE	DWG NO	SHEET
C	SQ1152	1