Uncontrolled Copy

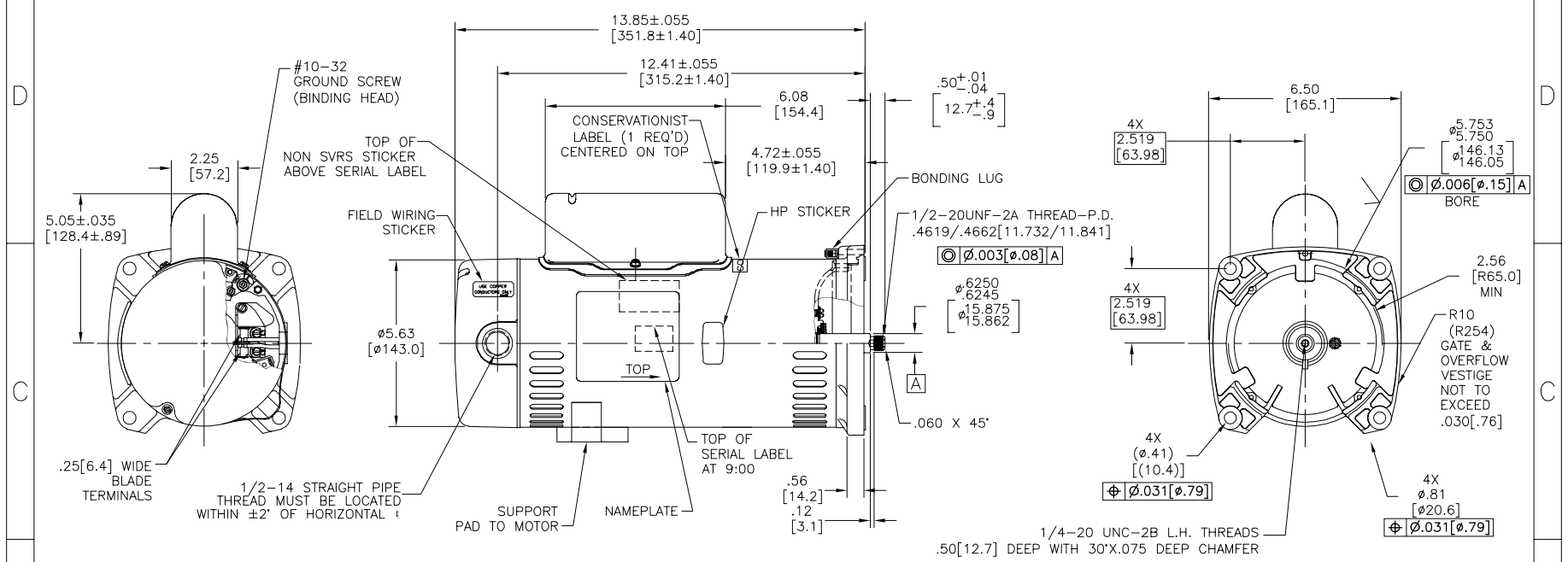

NAMEPLATE DATA	EXTERNAL CONNECTION DIAGRAM	NOTES
MODEL: K48N2PA105C4 CUST PN: SQ1202 HP: 2.0 SF: 1.3 ROT: CCWPE RPM: 3450 TYPE: UAK CODE: H FORM: FRAME: 48 Y VOLTS: 230 AMPS: MAX AMPS: 11.2 SF AMPS: – PH: 1 HZ: 60 INS: B AMB: 50°C DUTY: CONT ENCLOSURE: ODP THERMALLY PROTECTED	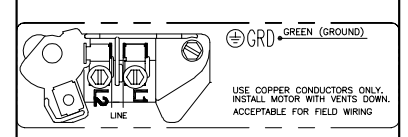	1. FINISH PAINT TO BE SATIN BLACK. 2. .44[11.2] WRENCH FLATS ON SHAFT–FOR ACCESS TO THIS WRENCH FLAT REMOVE END COVER. 3. STAINLESS STEEL SHAFT EXT. 4. LIMITS ON AMPLITUDE OF VIBRATION MEASURED AT BEARING HOUSING = .001. 5. CAPAC. HOUSING TO BE LOCATED WITHIN ±2.5° OF VERTICAL ℄ OF END FRAME (P.E.).

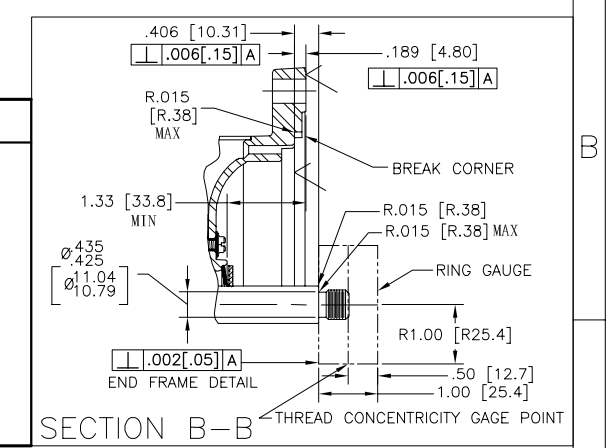

PERFORMANCE CURVE		APPROVED SAMPLE	
K48N2W1			
UL COMPONENT		CSA	
FILE#	CCN#	FILE#	GUIDE#
E25022	XEWR2	LR43341	4211–01
CUSTOMER	DISTRIBUTION SERVICES		

DRAWING REVISION: C	REVISION BY: F.NAVARRO	DATE: 02–28–2014
ECO: 0045866	APPROVED BY: G.ALVIDREZ	DATE: 02–28–2014
ECO DESCRIPTION:		

COPYRIGHT REGAL BELOIT AMERICA, INC. ALL RIGHTS RESERVED.
PROPRIETARY AND CONFIDENTIAL INFORMATION – THIS DOCUMENT IS THE PROPERTY OF REGAL BELOIT AMERICA, INC. AND CONTAINS PROPRIETARY AND CONFIDENTIAL INFORMATION. NO PERSON, CORPORATION OR OTHER ENTITY RECEIVING IT IS DEEMED, BY ACCEPTING IT, TO AGREE THAT IT, AND/OR ANY PART OF IT, SHALL NOT BE DISCLOSED TO ANY PERSON, CORPORATION OR OTHER ENTITY, DUPLICATED, AND/OR USED, EXCEPT AS EXPRESSLY APPROVED IN WRITING IN ADVANCE BY OWNER. THIS DOCUMENT SHALL BE RETURNED TO OWNER UPON REQUEST OR ANY IN SUBJECT TO CERTAIN RESTRICTIONS UNDER APPLICABLE EXPORT CONTROL LAWS AND REGULATIONS.

TOLERANCES UNLESS OTHERWISE SPECIFIED

DEC.	INCH	mm	ANGLE
.X	±0.1	±2.5	±0.5°
.XX	±0.02	±0.51	
.XXX	±0.005	±0.127	
.XXXX	±0.0005	±0.0127	

REMOVE BURRS & BREAK SHARP EDGES .003/.015 [.076/.381]
CORNER FILLETS .02 [.51]
MACHINED SURFACES 125 INCH / 3.2 mm
mm SHOWN IN [BRACKETS]

DRAWN BY:	JLG
DATE:	05–12–2009
APPROVED BY:	
DATE:	
PROCESS/FINISH	
THIRD ANGLE PROJECTION	

Regal Beloit America, Inc.

DESCRIPTION: MODEL–PFHP–48FR OUTLINE

MATERIAL: -

SIZE	DWG NO	SHEET
C	SQ1202	1