Uncontrolled Copy

REV	ECO	REV BY	DATE	APPD	DATE
G	ECO-0030834	A.BAUGHMAN	02-11-2013	A.BAUGHMAN	02-11-2013

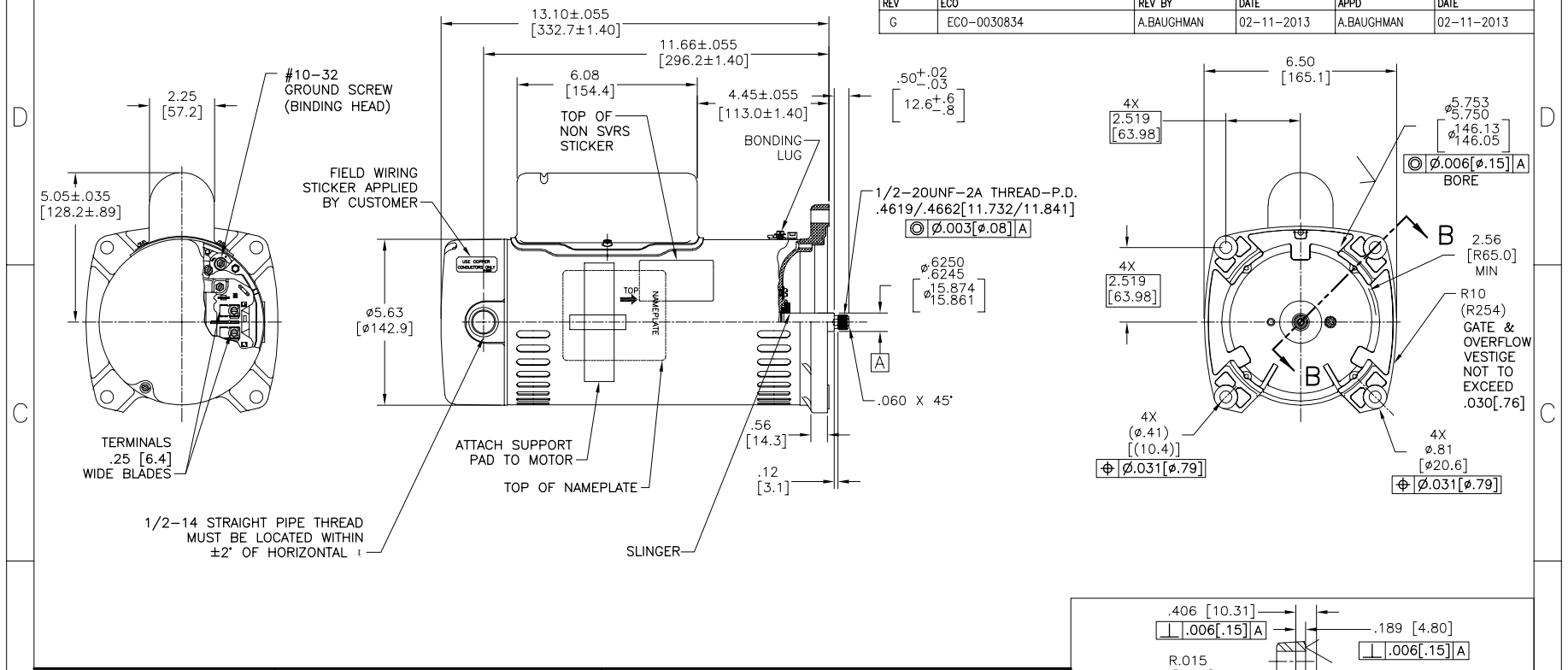

NAMEPLATE DATA

MODEL: K48L2P104B2
CUST PN: SQS1102R
HP: 1.0/.17 SF: 1.65
ROT: CCWPE
RPM: 3450/1725
TYPE: F/C CODE: K
FORM: FRAME: 48Y
VOLTS: 230
AMPS:
MAX AMPS: 7.7/2.8
SF AMPS: –
PH: 1 HZ: 60
INS: B AMB: 50°C
DUTY: CONT
ENCLOSURE: ODP
THERMALLY PROTECTED

EXTERNAL CONNECTION DIAGRAM

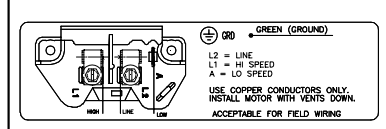

NOTES

1. FINISH PAINT TO BE SATIN BLACK.
2. .44[11.2] WRENCH FLATS ON SHAFT–FOR ACCESS TO THIS WRENCH FLAT REMOVE END COVER.
3. 303 STAINLESS STEEL SHAFT EXT.
4. LIMITS ON AMPLITUDE OF VIBRATION MEASURED AT BEARING–HOUSING=.001[.03]
5. CAPACITOR HOUSING TO BE LOCATED WITHIN ±2.5° OF VERTICAL ı OF END FRAME (P.E.)

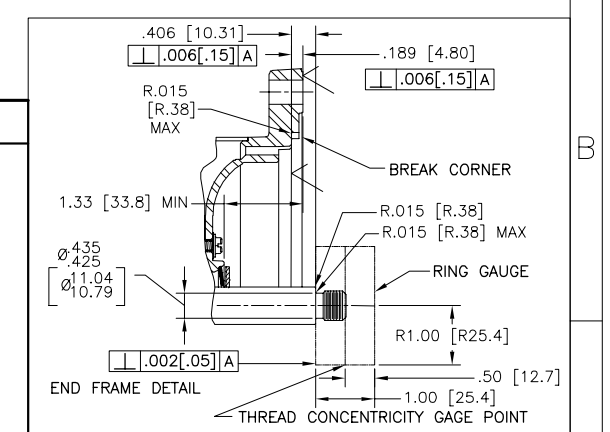

END FRAME DETAIL

PERFORMANCE CURVE		APPROVED SAMPLE	
K48M2W18			
UL COMPONENT		CSA	
FILE#	CCN#	FILE#	GUIDE#
E25022	XEWR2	LR43341	4211-01
CUSTOMER	DISTRIBUTION SERVICES		

GEOMETRIC CHARACTERISTICS & SYMBOLS
▱ FLATNESS
— STRAIGHTNESS
∠ ANGULARITY
⊥ PERPENDICULARITY (SQUARENESS)
// PARALLELISM
○ ROUNDNESS (CIRCULARITY)
⌭ CYLINDRICITY
⌓ PROFILE OF ANY SURFACE
⌒ PROFILE OF ANY LINE
↗ RUNOUT
⌖ TRUE POSITION
◎ CONCENTRICITY
⌯ SYMMETRY
ASME Y14.5M 1994

UNLESS OTHERWISE SPECIFIED
DIM. TOLERANCES ARE AS FOLLOWS:
X XX XXX XXXX
INCH ±.1 ±.02 ±.005 ±.0005
mm ±0.5 ±0.13 ±0.013
ANG. ±.50 DEG
REMOVE BURRS & BREAK SHARP EDGES:
INCH .003–.015 mm 0.1–0.4
CORNER FILLETS TO:
INCH .020 mm 0.5
MACHINE SURFACES:
INCH 125 mm 3.2
METRIC DIMS. SHOWN IN [BRACKETS]

DR BY: JAH	01-09-07	
APPD: DRF	01-09-07	
THIRD ANGLE PROJECTION	EDS DATE 11-11-2011	
	FORMAT REV H	

CONFIDENTIAL: THIS DRAWING AND ITS INFORMATION ARE THE EXCLUSIVE AND CONFIDENTIAL PROPERTY OF REGAL–BELOIT CORPORATION AND ARE NOT TO BE DISCLOSED, DUPLICATED, DISTRIBUTED OR OTHERWISE USED WITHOUT THE WRITTEN CONSENT OF REGAL–BELOIT CORPORATION. –ALL RIGHTS RESERVED.

REGAL **REGAL-BELOIT CORPORATION**

DESCRIPTION: MODEL–PFHP–48FR OUTLINE

SIZE: C DWG NO: SQS1102R

SCALE: NONE SHEET 1

Uncontrolled Copy

REVISION:	ECO	REVISADO POR:	FECHA:	APROBADO POR:	FECHA:
G	ECO-0030834	A.BAUGHMAN	02-11-2013	A.BAUGHMAN	02-11-2013

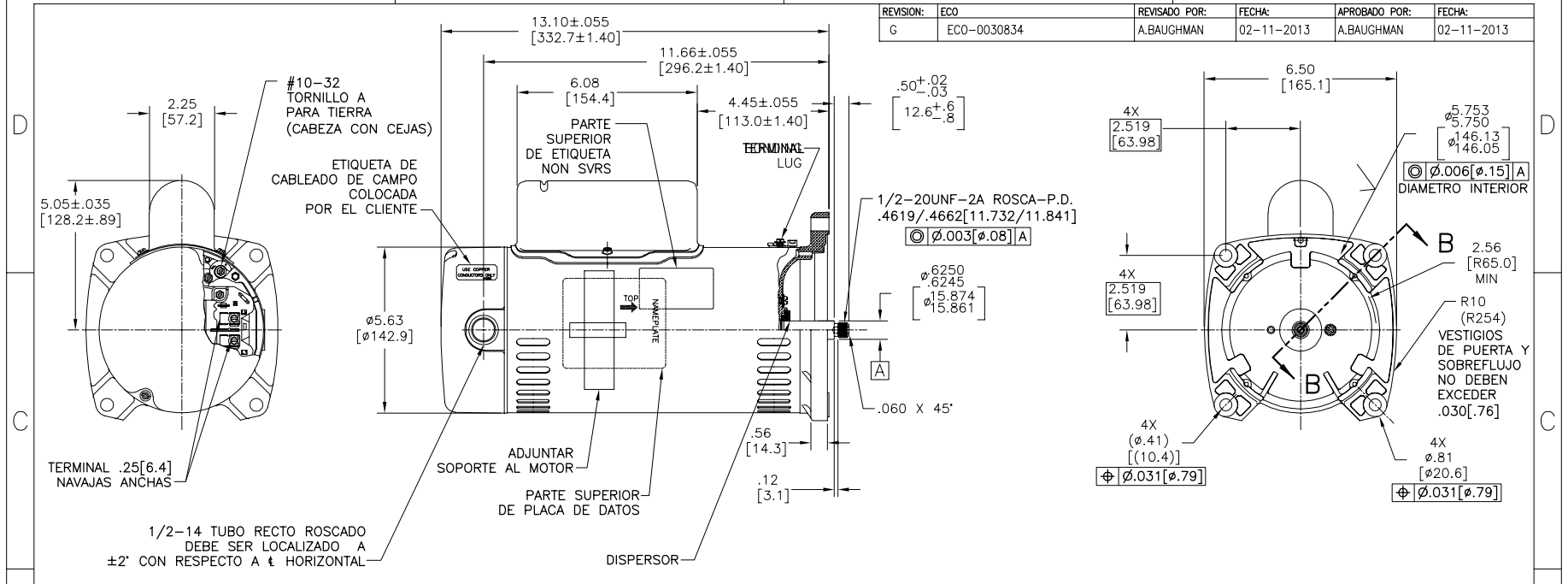

NAMEPLATE DATA

MODEL: K48L2P104B2
CUST PN: SQS1102R
HP: 1.0/.17 SF: 1.65
ROT: CCWPE
RPM: 3450/1725
TYPE: F/C CODE: K
FORM: FRAME: 48Y
VOLTS: 230
AMPS:
MAX AMPS: 7.7/2.8
SF AMPS: –
PH: 1 HZ: 60
INS: B AMB: 50°C
DUTY: CONT
ENCLOSURE: ODP
THERMALLY PROTECTED

EXTERNAL CONNECTION DIAGRAM

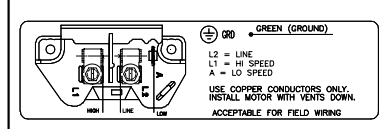

NOTES

1. EL ACABADO DE LA PINTURA SERA NEGRO SATINADO.
2. LLAVE PLANA DE .44[11.2] EN FLECHA – PARA ACCESO A ESTA LLAVE PLANA REMOVER CUBIERTA.
3. EXTENSION DE FLECHA DE ACERO INOXIDABLE.
4. MEDIDA DE LOS LIMITES DE AMPLITUD DE VIBRACION EN LA CAVIDAD DEL BALERO=.001[.03].
5. CUBIERTA DEL CAPACITOR SERA UBICADO ENTRE ±2.5° DE LA LINEA VERTICAL ℄ DE LA TAPA (LADO DE BOMBA).

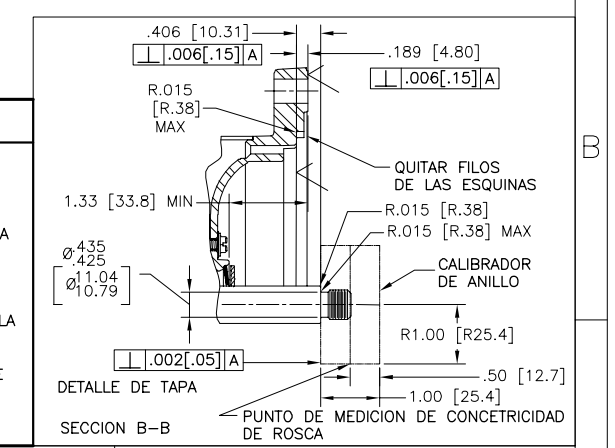

PERFORMANCE CURVE		APPROVED SAMPLE	
K48M2W18			
UL COMPONENT		CSA	
FILE#	CCN#	FILE#	GUIDE#
E25022	XEWR2	LR43341	4211-01
CUSTOMER	DISTRIBUTION SERVICES		

CARACTERISTICAS DE GEOMETRIA Y SIMBOLOS
▱ PLANICIDAD
— RECTITUD
∠ ANGULARIDAD
⊥ PERPENDICULARIDAD (A ESCUADRA)
// PARALELISMO
○ REDONDEZ (CIRCULARIDAD)
⌭ CILINDRICIDAD
⌓ PERFIL DE CUALQUIER SUPERFICIE
⌒ PERFIL DE CUALQUIER LINEA
↗ VARIACION
⌖ POSICION REAL
◎ CONCENTRICIDAD
⌯ SIMETRIA
ASME Y14.5M 1994

A MENOS QUE SE ESPECIFIQUE DE OTRA MANERA, LAS TOLERANCIAS DE LAS DIMS. SON LAS SIGUIENTES:
X XX XXX XXXX
PULG ±.1 ±.02 ±.005 ±.0005
mm ±0.5 ±0.13 ±0.013
ANG. ±.50 GRADOS
ELIMINAR REBABAS Y ORILLAS FILOSAS DEL BORDE:
PULG .003-.015 mm 0.1-0.4
FILETEAR ESQUINA: PULG .020 mm 0.5
MAQUINAR SUPERFICIES
PULG 125 mm 3.2
DIMS METRICAS MOSTRADAS [PARENTESIS]

DIBUJADO POR: JAH	01-09-07	
APROBADO POR: DRF	01-09-07	
TERCER ANGULO DE PROYECCION	FECHA EDS: 11-11-2011	REV. FORMATO: H

CONFIDENCIAL: ESTE DIBUJO Y SU INFORMACION SON PROPIEDAD DE USO EXCLUSIVO Y CONFIDENCIAL DE REGAL-BELOIT CORPORATION. Y NO DEBERAN SER REVELADOS, DUPLICADOS, DISTRIBUIDOS O USARSE DE OTRA MANERA SIN EL CONSENTIMIENTO ESCRITO DE REGAL-BELOIT CORPORATION. -TODOS LOS DERECHOS RESERVADOS.

REGAL **REGAL-BELOIT CORPORATION**

DESCRIPCION: MODEL-PFHP-48FR OUTLINE

TAMAÑO: C | NUMERO DE DIBUJO: SQS1102R

ESCALA: NONE | HOJA: 1