Uncontrolled Copy

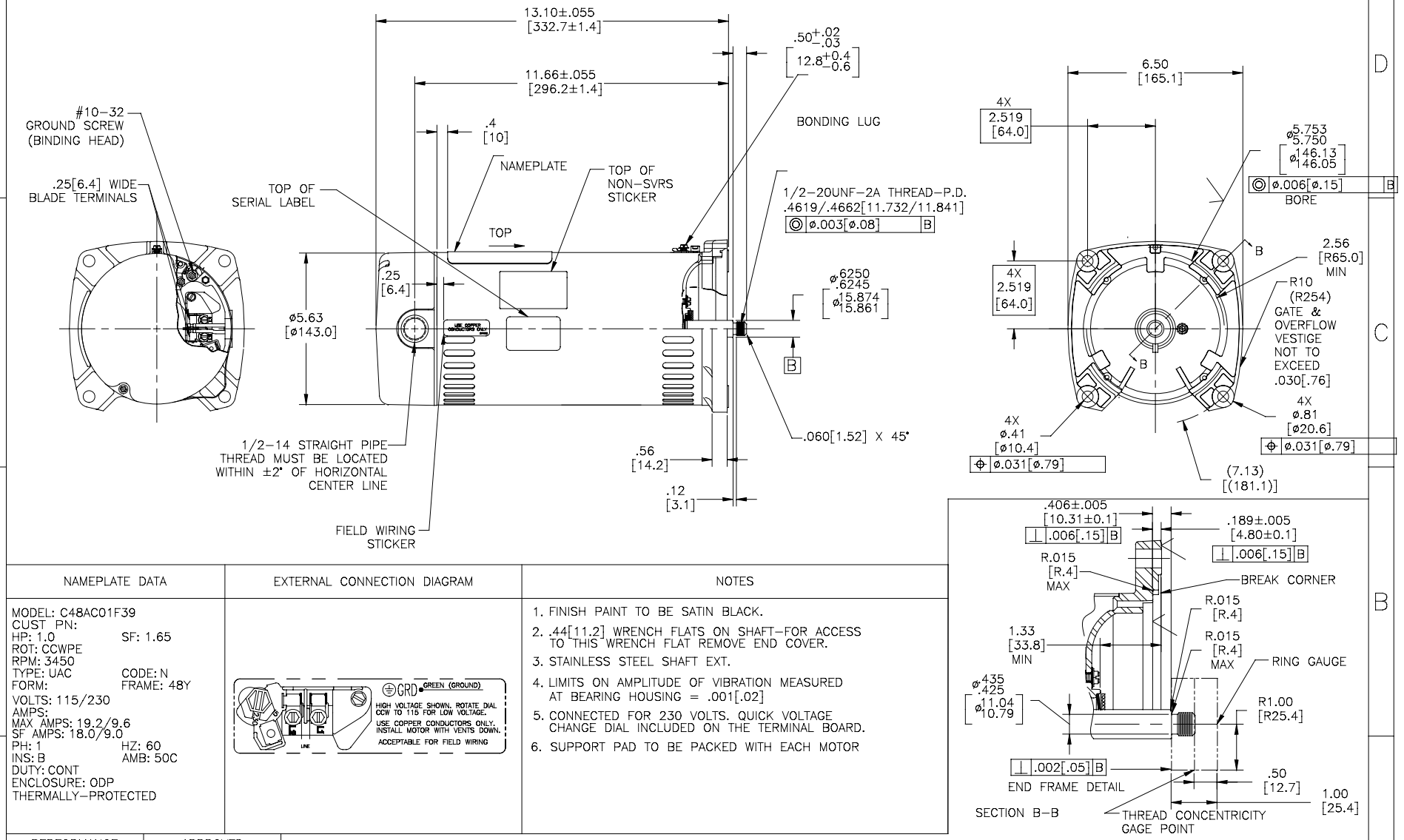

NAMEPLATE DATA	EXTERNAL CONNECTION DIAGRAM	NOTES
MODEL: C48AC01F39 CUST PN: HP: 1.0 SF: 1.65 ROT: CCWPE RPM: 3450 TYPE: UAC CODE: N FORM: FRAME: 48Y VOLTS: 115/230 AMPS: MAX AMPS: 19.2/9.6 SF AMPS: 18.0/9.0 PH: 1 HZ: 60 INS: B AMB: 50C DUTY: CONT ENCLOSURE: ODP THERMALLY−PROTECTED		1. FINISH PAINT TO BE SATIN BLACK. 2. .44[11.2] WRENCH FLATS ON SHAFT−FOR ACCESS TO THIS WRENCH FLAT REMOVE END COVER. 3. STAINLESS STEEL SHAFT EXT. 4. LIMITS ON AMPLITUDE OF VIBRATION MEASURED AT BEARING HOUSING = .001[.02] 5. CONNECTED FOR 230 VOLTS. QUICK VOLTAGE CHANGE DIAL INCLUDED ON THE TERMINAL BOARD. 6. SUPPORT PAD TO BE PACKED WITH EACH MOTOR

PERFORMANCE CURVE		APPROVED SAMPLE	
C48L2W27			
UL COMPONENT		CSA	
FILE#	CCN#	FILE#	GUIDE#
E46412	PRGY2	LR43341	4211−01
CUSTOMER	SABEDO INTERNATIONAL INC.		

DRAWING REVISION	REVISION BY	DATE
A		
ECO	APPROVED BY	DATE
ECO−84114	.	.
ECO DESCRIPTION		
NEW		

COPYRIGHT REGAL BELOIT AMERICA, INC. ALL RIGHTS RESERVED.
PROPRIETARY AND CONFIDENTIAL INFORMATION − THIS DOCUMENT IS THE PROPERTY OF REGAL BELOIT AMERICA, INC. ("COMPANY") AND CONTAINS OWNER'S PROPRIETARY INFORMATION. THIS DOCUMENT IS PROVIDED TO THE RECIPIENT ("OWNER") AS AN ORIGINAL DRAWING. BY RECEIVING IT, YOU AGREE THAT IT, AND/OR ANY PART OF IT, SHALL NOT BE DISCLOSED TO ANY PERSON, CORPORATION OR OTHER ENTITY, DUPLICATED, AND/OR USED, EXCEPT AS EXPRESSLY APPROVED IN WRITING IN ADVANCE BY OWNER. THIS DOCUMENT SHALL BE RETURNED TO OWNER UPON REQUEST. IT MAY BE SUBJECT TO CERTAIN RESTRICTIONS UNDER APPLICABLE EXPORT CONTROL LAWS AND REGULATIONS.

TOLERANCES UNLESS OTHERWISE SPECIFIED

DEC.	INCH	mm	ANGLE
.X	±0.1	[±2.5]	±0.5°
.XX	±0.02	[±0.51]	
.XXX	±0.005	[±0.127]	
.XXXX	±0.0005	[±0.0127]	

REMOVE BURRS & BREAK SHARP EDGES .003/.015 [.076/.381]
CORNER FILLETS .02 [.51]
MACHINED SURFACES INCH 125/ mm 3.2/
mm SHOWN IN [BRACKETS]

DRAWN BY:	MEQ
DATE:	08/26/15
APPROVED BY:	JDR
DATE:	08/26/15
REFERENCE	.
THIRD ANGLE PROJECTION	

Regal Beloit America, Inc.

DESCRIPTION: MODEL−PFHP−48FR OUTLINE

MATERIAL: . PROCESS/FINISH: .

SIZE: C DWG NO: C48AC01F39CX SHEET: 1