SS86594

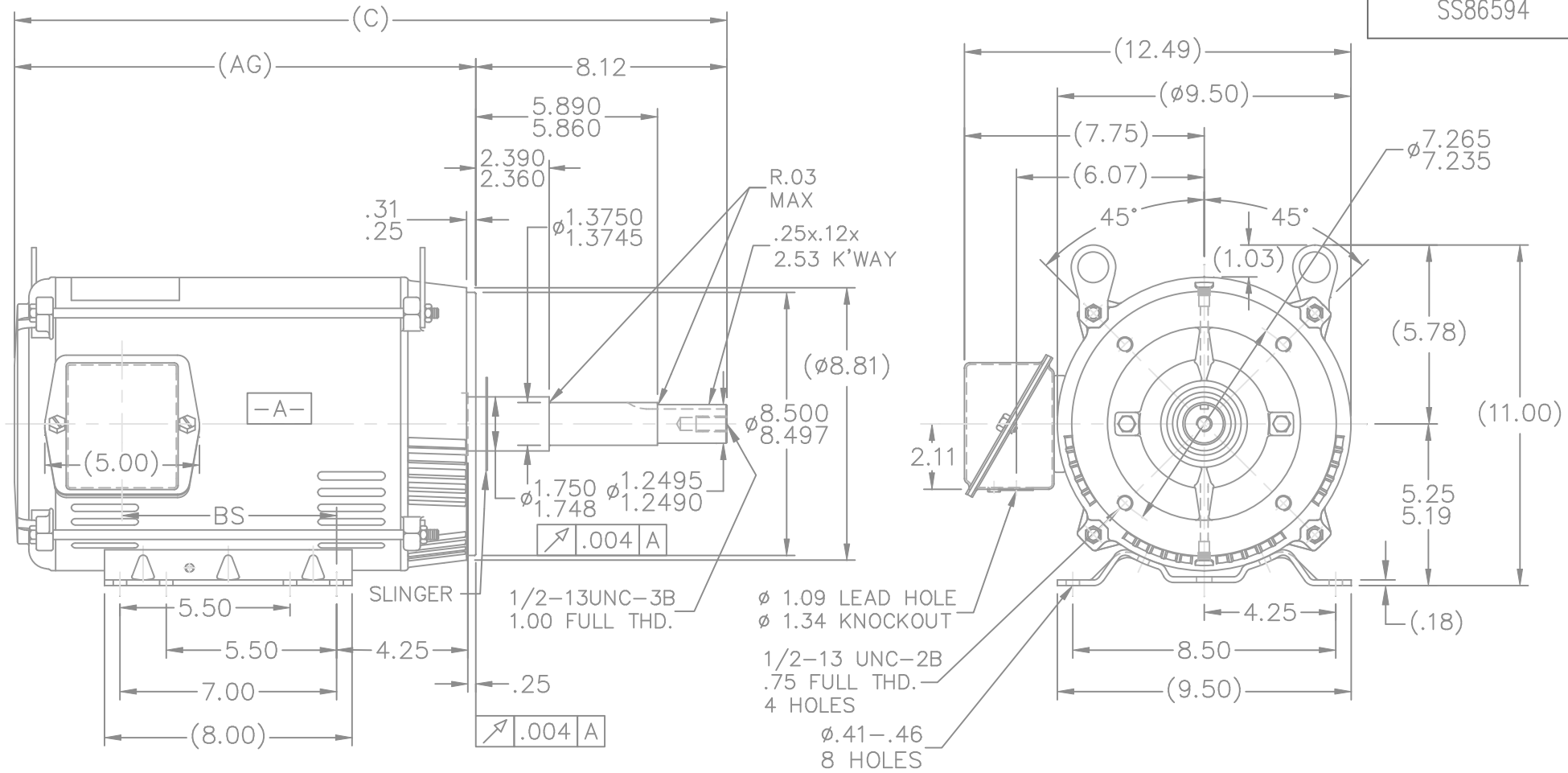

DASH	FR.	C	AG	BS	MOUNTING
965	213JP	21.53	13.41	5.43	
1115	213/15JP	23.03	14.91	6.93	
1240	213/15JP	24.28	16.16	8.18	F1 ONLY

NOTES:
1. NAMEPLATE TO BE READ FROM C'BOX SIDE OF MOTOR.
2. BOX CAN BE MOUNTED IN 90° STEPS.
3. BOX CAN BE MOUNTED ON OPPOSITE SIDE BY REMOVING BRACKETS AND TURNING FRAME 180°. (EXCEPT AS NOTED)

NO.	REVISION	BY & DATE	CHK
4	UPDATED DRAWING	TJW 04/27/2007	
3	REDRAWN IN AUTOCAD	TAT 07-13-2004	ML
2	UPDATED C'BOX GEOMETRY CN 28425	DRS 01-31-2000	
1	NEW DRAWING – DES/DEV	DA 04-02-1996	

TOLERANCES UNLESS SPECIFIED	
DEC.	INCHES
.X	±.1
.XX	±.03
.XXX	±.005
.XXXX	±.0005
ANG	±7'30"

MARATHON ELECTRIC

TITLE OUTLINE
210JP FR.-BB-TS-DR.PR.-C' FACE

MAT'L.
FINISH
CAD FILE ss86594
RFP
DIST LB

DRAWN	DA 03-26-1996
CHK	ML 04-01-1996
APPD	DN 04-01-1996
SCALE	1=5
REF	
FMF	
PREV	

SIZE	DRAWING NO.	PAGE OF	REV.
A	SS86594		4

THIS DRAWING IN DESIGN AND DETAIL IS OUR PROPERTY AND MUST NOT BE USED EXCEPT IN CONNECTION WITH OUR WORK ALL RIGHTS OF DESIGN AND INVENTION ARE RESERVED
THIS IS AN ELECTRONICALLY GENERATED DOCUMENT – DO NOT SCALE THIS PRINT

10/2/2008 1:32:00 PM