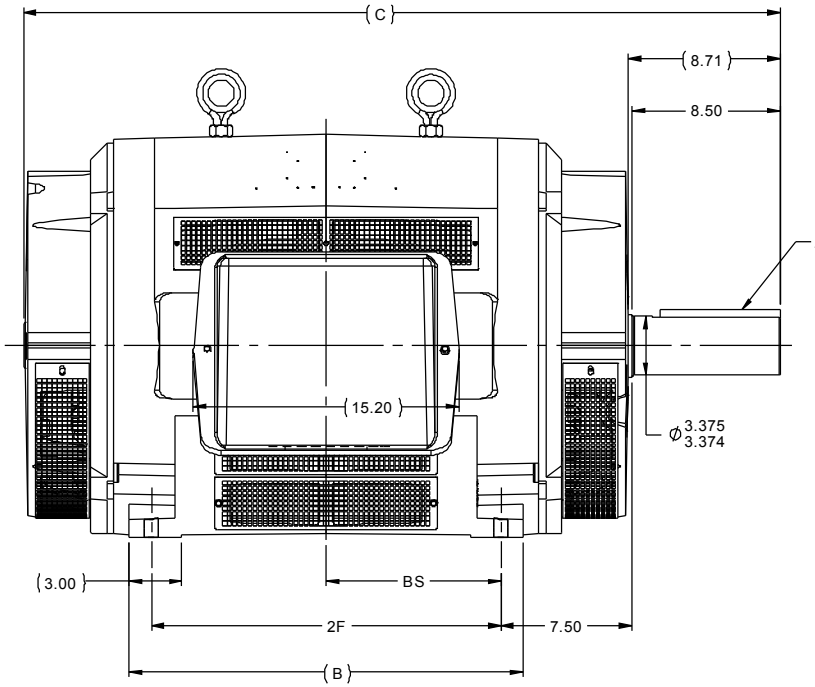

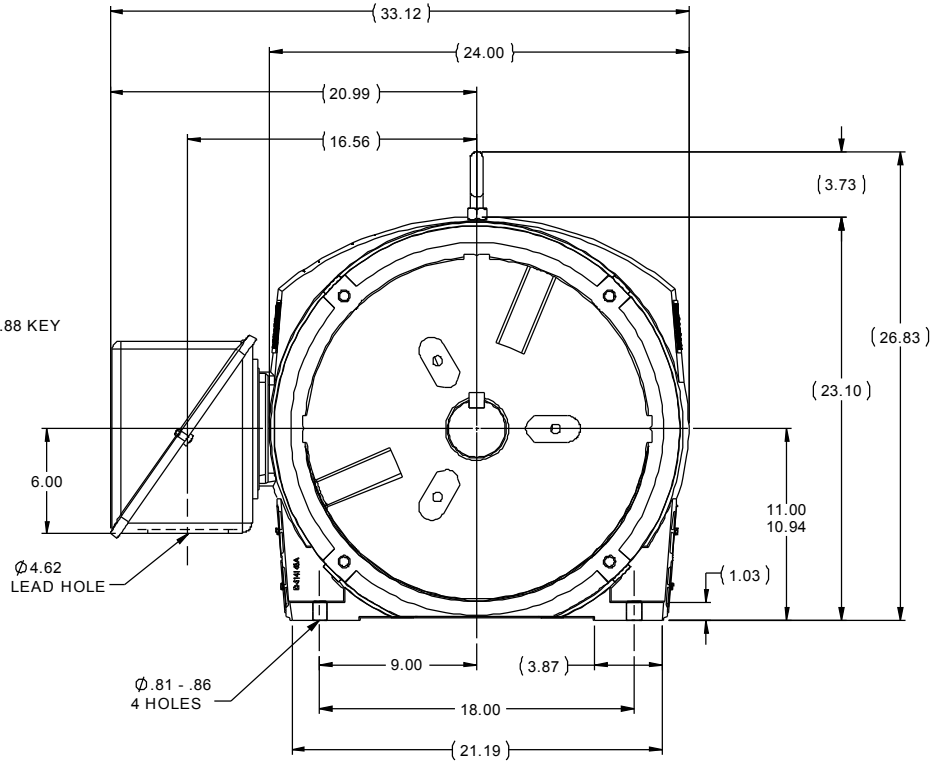

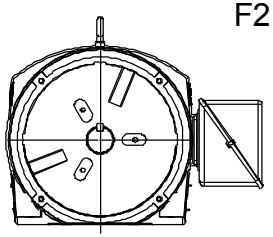

NOTES:

1. CONDUIT BOX CAN BE ROTATED IN 90° STEPS
2. CONDUIT BOX CAN BE MOUNTED ON OPPOSITE SIDE BY REMOVING BRACKETS AND TURNING FRAME 180°
3. NAMEPLATES TO BE READ FROM CONDUIT BOX SIDE OF MOTOR

DASH	FRAME	C	AG	B	2F	2FF	2FFF	BS
2438	447T	43.25	------	22.50	20.00	------	------	10.00
2938	449T	48.25	------	27.50	25.00	------	------	12.50

NO	REVISION	BY & DATE

THIRD ANGLE PROJECTION

TOLERANCES UNLESS SPECIFIED

DEC	INCHES
X	±.1
XX	±.03
XXX	±.005
XXXX	±.0005
ANG	±7'30"

CHK

RFP 09-18-2013

NETWORK FILE NAME SS555884

REGAL **Regal-Beloit Corporation**

TITLE OUTLINE - DR. PR.
447 - 449T FR.

MAT'L

FINISH

PREV

SIZE B

DRAWING NO **SS555884**

REV

DRAWN	WGJ 09-18-2013
CHK	DD 09-18-2013
APPR	DK 09-18-2013
SCALE	1:12
REF	SS514867
FMF	ECO-0038201
PAGE	OF

9/18/2013 9:00:06 AM - Converted by Connexus