169549–60ME

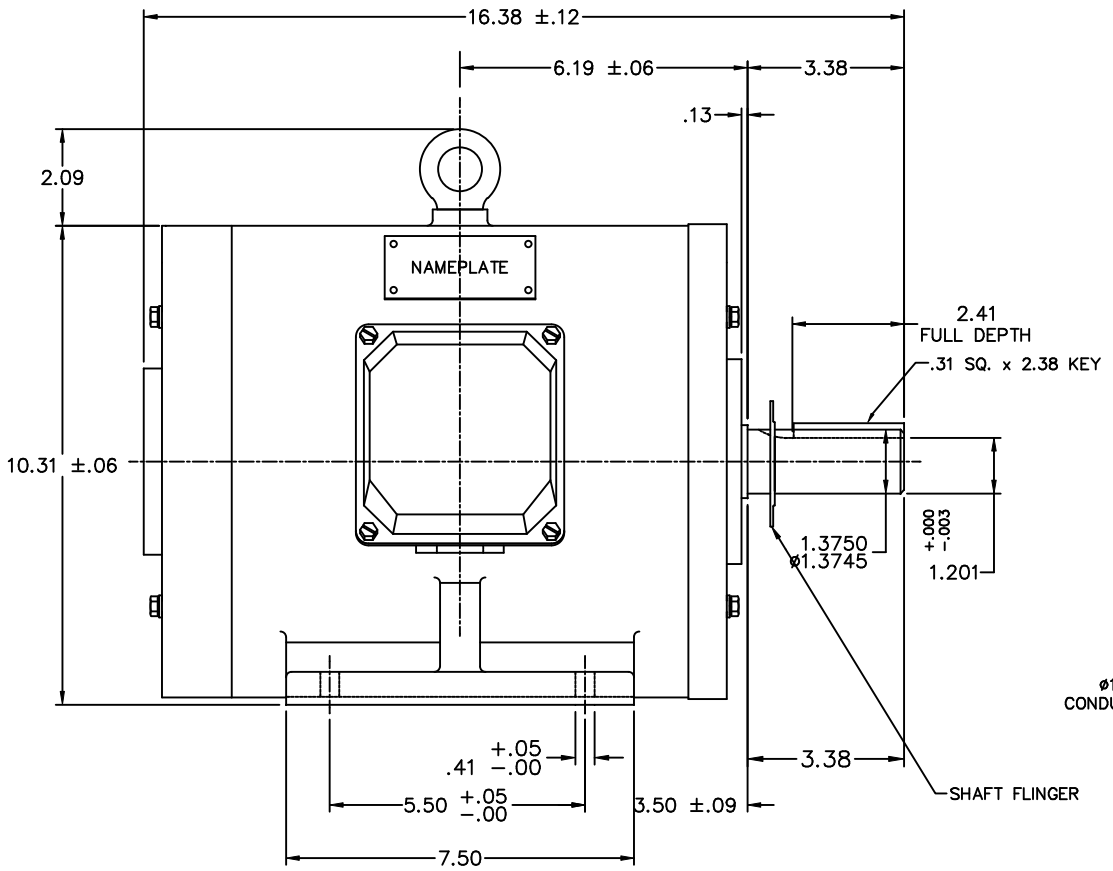

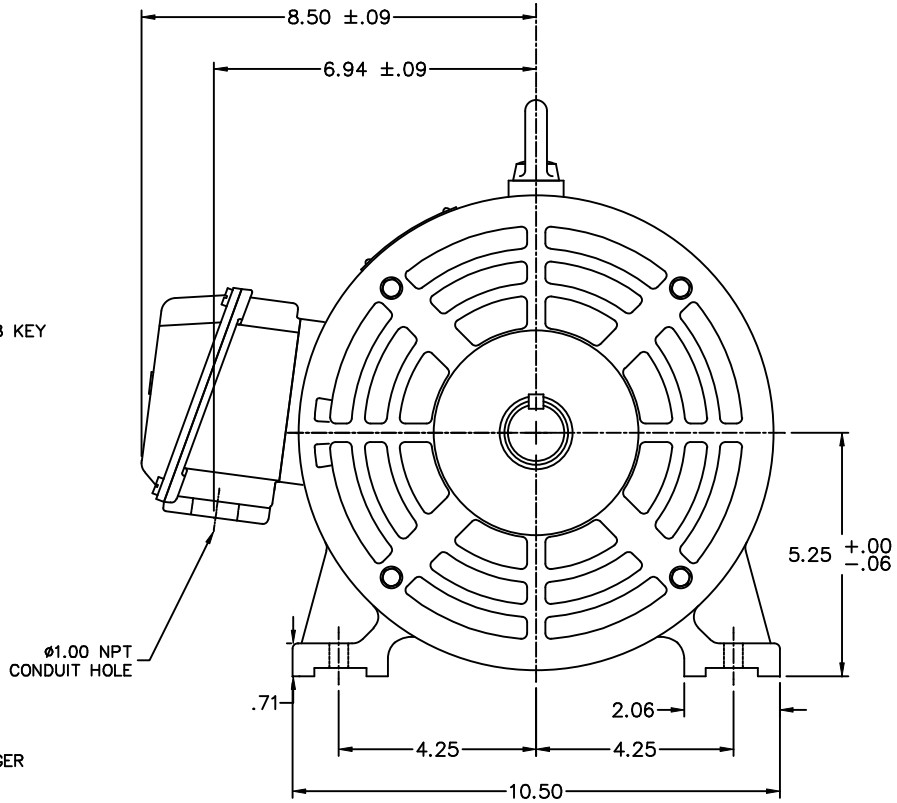

				TOLERANCES UNLESS SPECIFIED				
				DEC.	INCHES	MARATHON ELECTRIC	DRAWN CTO 04–23–2002	
				.X	±.1		CHK ML 05–20–2002	
				.XX	±.03	TITLE OUTLINE – 213T FRAME	APPD SB 05–21–2002	
				.XXX	±.005	ODP, RIGID MOUNT, NEW CON–BOX	SCALE 1=1	
1	NEW DRAWING	CTO 5/21/02		.XXXX	±.0005	MAT'L. CAST IRON	REF 169515	
NO.	REVISION	BY & DATE	CHK	ANG	±1/2°	FINISH	FMF	
							PREV	

THIS DRAWING IN DESIGN AND DETAIL IS OUR PROPERTY AND MUST NOT BE USED EXCEPT IN CONNECTION WITH OUR WORK ALL RIGHTS OF DESIGN AND INVENTION ARE RESERVED
THIS IS AN ELECTRONICALLY GENERATED DOCUMENT – DO NOT SCALE THIS PRINT

RFP
DIST
CAD FILE 16954960me
SIZE B
DRAWING NO. 169549–60ME
REV. 1