035773

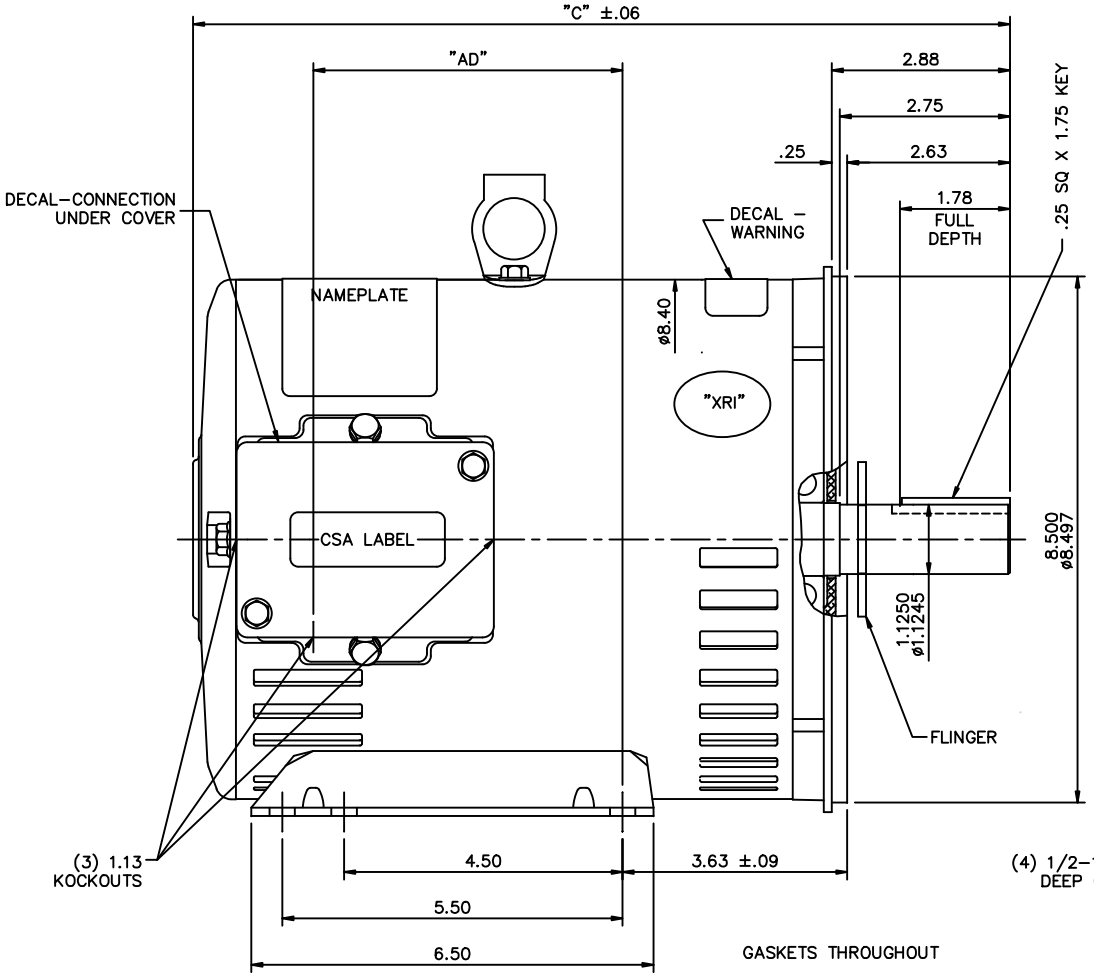

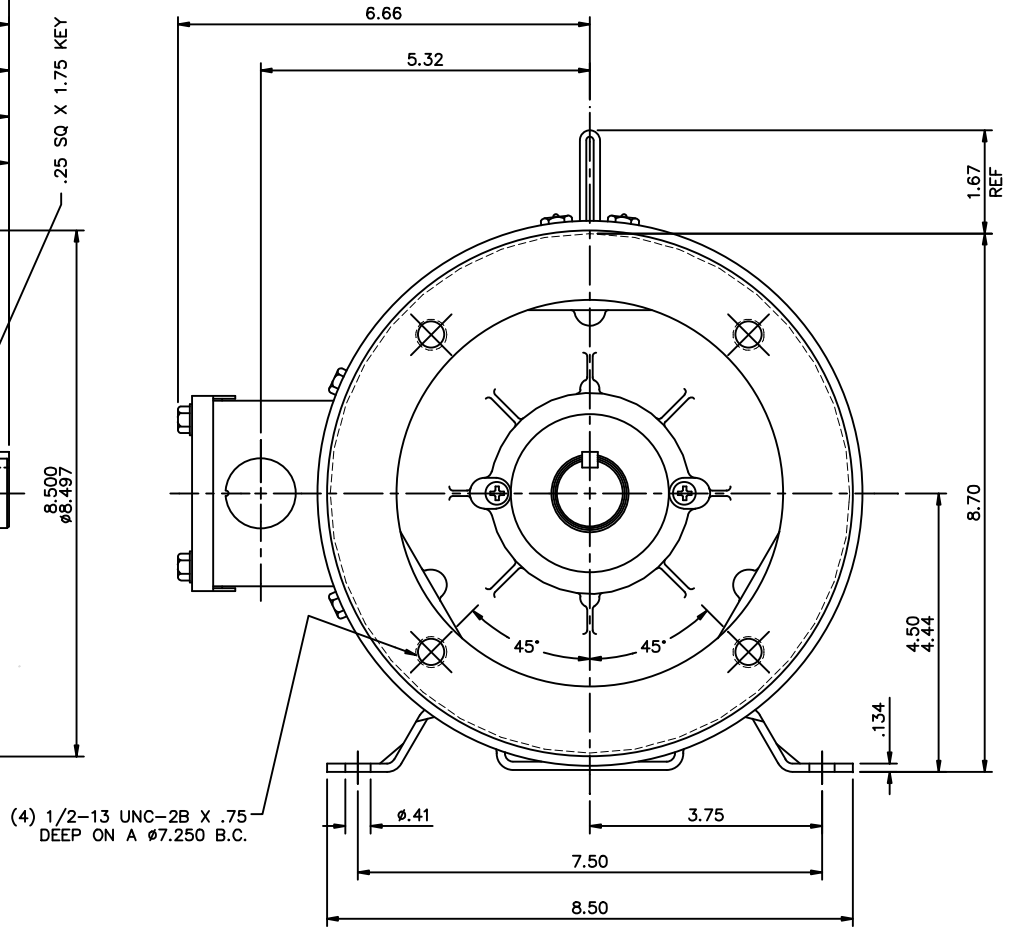

GASKETS THROUGHOUT

MAXIMUM FACE RUNOUT TO BE .004 T.I.R.
MAXIMUM PILOT ECCENTRICITY TO BE .004 T.I.R.
PERMISSIBLE SHAFT RUNOUT TO BE .002 T.I.R.

DASH	"C"	"AD"
800	12.20	4.00
850	12.70	4.50
900	13.20	5.00
950	13.70	5.50
1000	14.20	6.00
1050	14.70	6.50
1100	15.20	7.00
1150	15.70	7.50

NO.	REVISION	BY & DATE	CHK

TOLERANCES UNLESS SPECIFIED

DEC.	INCHES
.X	±.1
.XX	±.03
.XXX	±.005
.XXXX	±.0005
ANG	±1/2°

MARATHON ELECTRIC

TITLE: OUTLINE – 180TC FRAME DRIP PROOF – RIGID "C"

MAT'L.: GENERAL PURPOSE

FINISH

CAD FILE: 035773

RFP

DIST: NLV

SIZE: B

DRAWING NO.: 035773

REV.

DRAWN: ST 01/01/2011

CHK

APPD

SCALE: 1=2

REF: 035521

FMF: 182TTDW14012

PREV

THIS DRAWING IN DESIGN AND DETAIL IS OUR PROPERTY AND MUST NOT BE USED EXCEPT IN CONNECTION WITH OUR WORK ALL RIGHTS OF DESIGN AND INVENTION ARE RESERVED
THIS IS AN ELECTRONICALLY GENERATED DOCUMENT – DO NOT SCALE THIS PRINT