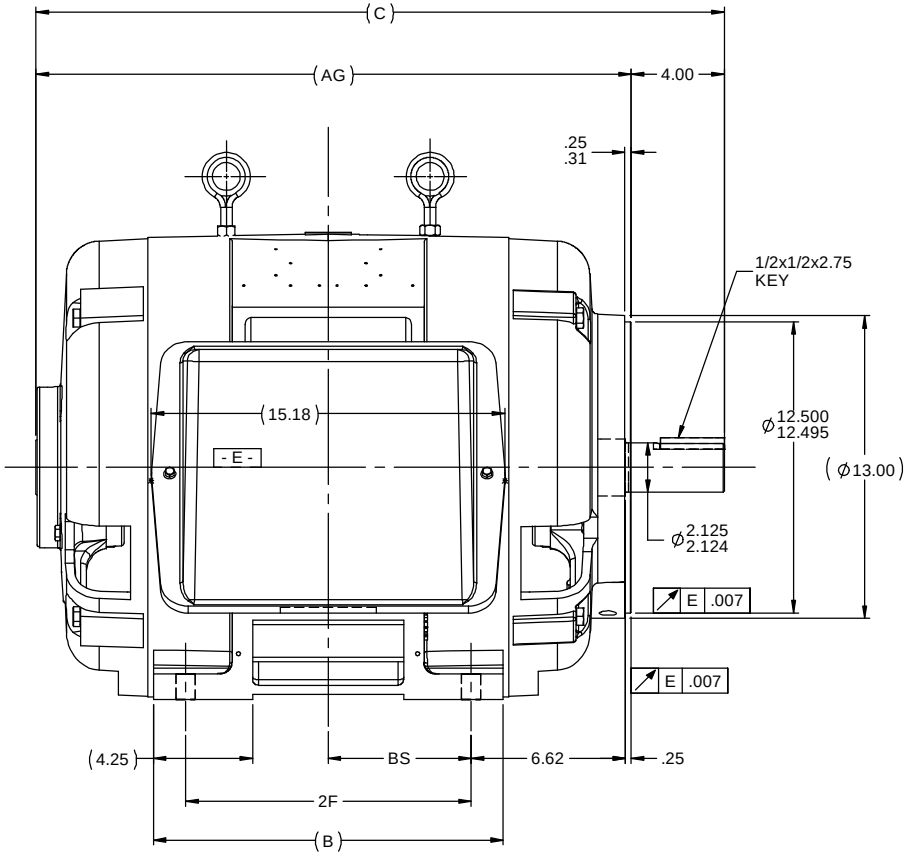

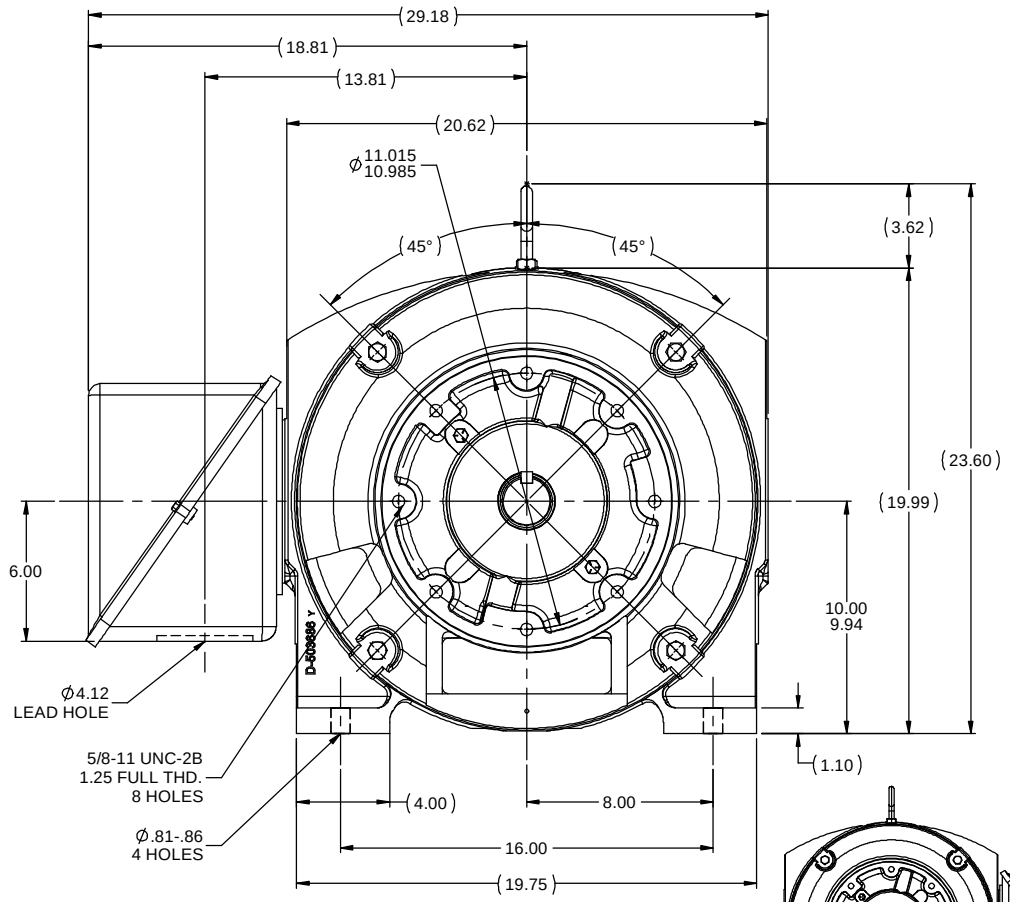

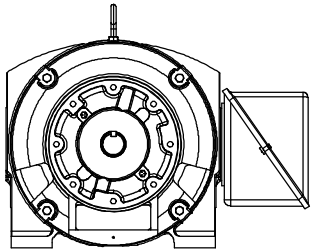

F2 VIEW

NOTES:
1. BOX CAN BE ROTATED IN 90° STEPS.
2. BOX CAN BE MOUNTED ON OPPOSITE SIDE BY REMOVING BRACKETS AND TURNING FRAME 180°.
3. NAMEPLATES TO BE READ FROM CONDUIT BOX SIDE OF MOTOR.

DASH	FRAME	B	C	2F	AG	BS
1550	404TSC	15.00	29.50	12.25	25.50	6.12
1700	405TSC	16.50	31.00	13.75	27.00	6.88

NO	REVISION	BY & DATE	CHK
07	ADDED F2 VIEW PER MU108019, REDRAWN IN SOLIDWORKS	JG 07/16/2012	DJK
06	REDRAWN IN AUTOCAD	TAT 06/29/2004	ML
05	REPLACED ONE EYEBOLT FOR TWO CN28063	BJW 2/10/2000	
04	UPDATED C'BOX GEOMETRY CN28063	TRB 02/10/2000	
03	REDRAWN IN AUTOCAD	TLB 02/29/1988	

TOLERANCES UNLESS SPECIFIED

DEC	INCHES
.X	±.1
.XX	±.03
.XXX	±.005
.XXXX	±.0005
ANG	±1/2°

marathon electric

TITLE OUTLINE
400TSC FR. - DR. PR. - (STD) - C'FACE

MAT'L
FINISH

DRAWN TLB 02/29/1988
CHK FG 02/29/1988
APPR GK 02/29/1988
SCALE 3:16
REF
FMF
PAGE OF

THIRD ANGLE PROJECTION

RFP
PREV
NETWORK FILE NAME SS510954

SIZE B
DRAWING NO SS510954
REV 07

7/16/2012 10:54:06 AM - Converted by Connexus