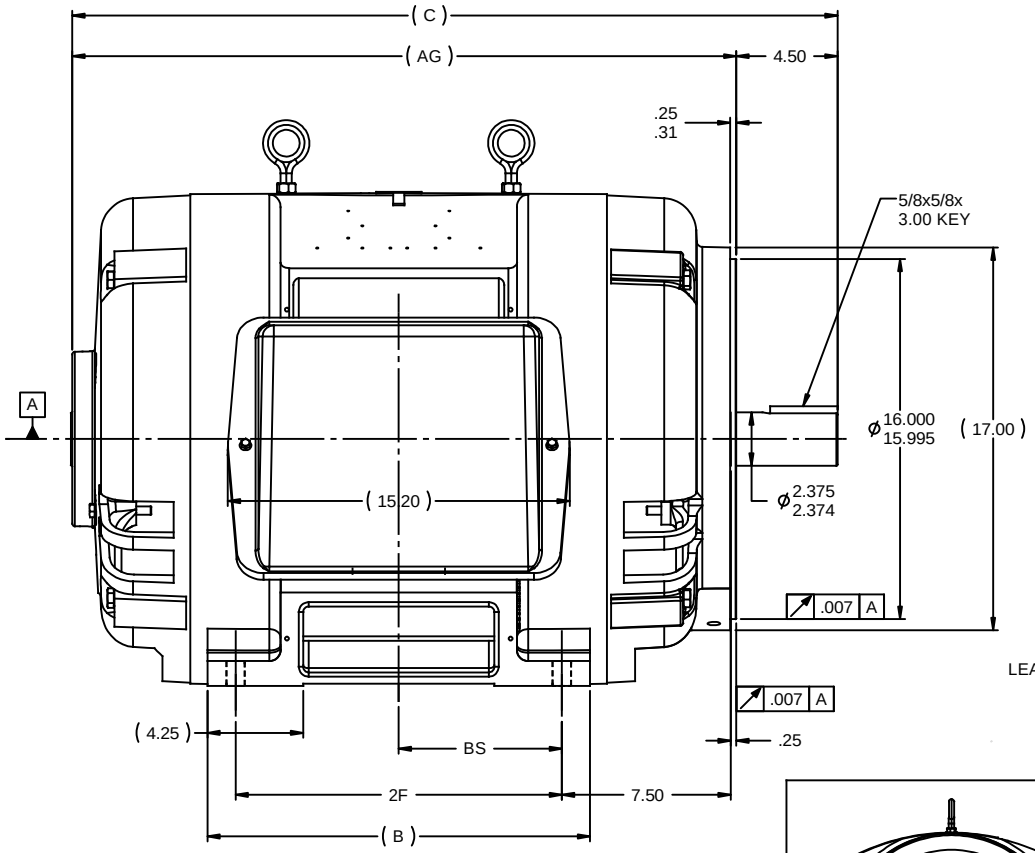


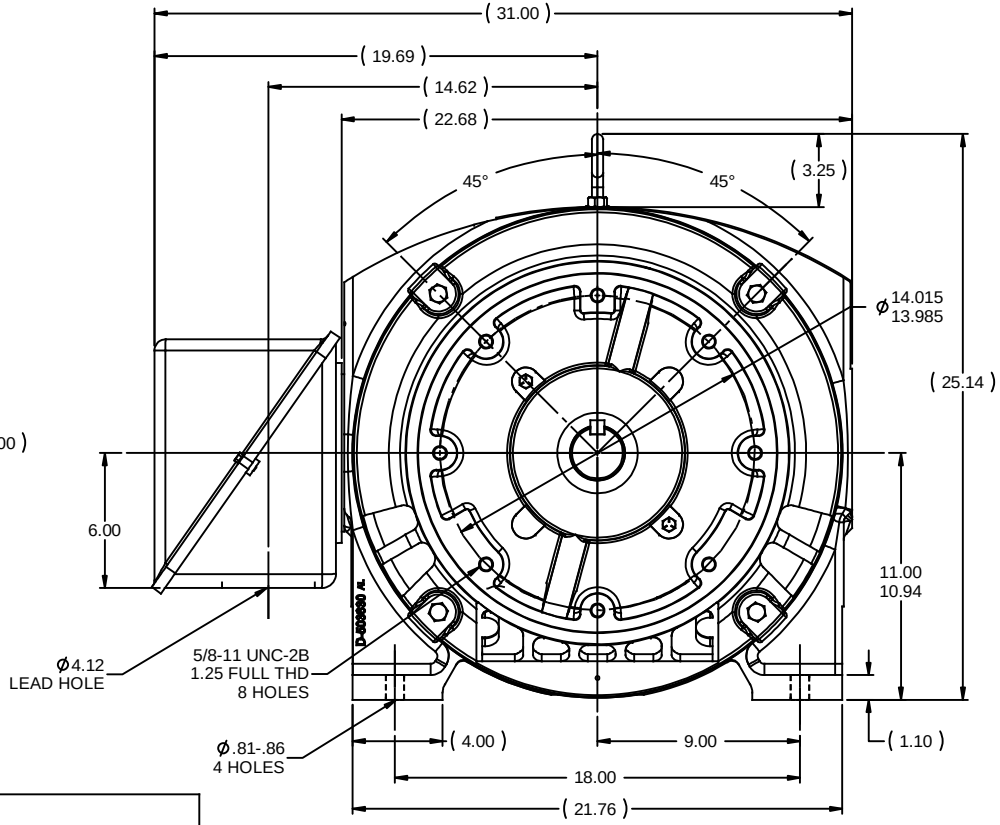


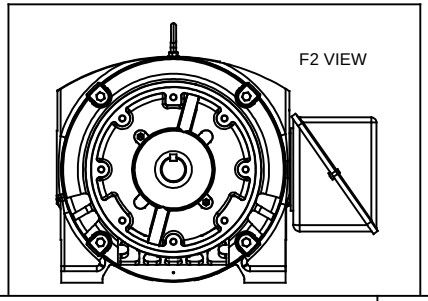


NOTES:
1. CONDUIT BOX CAN BE ROTATED IN 90° STEPS.
2. CONDUIT BOX CAN BE MOUNTED ON OPPOSITE SIDE BY REMOVING BRACKETS AND TURNING FRAME 180°.
3. NAMEPLATES TO BE READ FROM CONDUIT BOX SIDE OF MOTOR.

| DASH | FRAME | B | C | AG | 2F | BS |
|---|---|---|---|---|---|---|
| 1850 | 444TSC | 17.00 | 34.00 | 29.50 | 14.50 | 7.25 |
| 2050 | 445TSC | 19.00 | 36.00 | 31.50 | 16.50 | 8.25 |

| NO | REVISION | BY & DATE | CHK |
|---|---|---|---|
| 9 | REDRAWN IN SOLIDWORKS | JSB 09-13-2011 | XX |
| 8 | ADDED F2 VIEW | CDP 09-08-2011 | CMN |
| 7 | UPDATED FRAME AND CONDUIT BOX CN 28063 | KL 10-21-2004 | XX |
| 6 | REDRAWN IN AUTOCAD | TAT 06-29-2004 | ML |
| 5 | REDRAWN ON CADD | TBL 03-16-1988 | |

TOLERANCES UNLESS SPECIFIED

| | |
|---|---|
| DEC | INCHES |
| .X | ±.1 |
| .XX | ±.03 |
| .XXX | ±.005 |
| .XXXX | ±.0005 |
| ANG | ±7'30" |

marathon electric

TITLE OUTLINE
440TSC FR. - DR.PR. - C'FACE

MAT'L
FINISH

DRAWN TLB 03-16-1988
CHK FG 03-16-1988
APPR ML 03-16-1988
SCALE 1:5.5
REF
FMF
PAGE OF

THIRD ANGLE PROJECTION

RFP
PREV
NETWORK FILE NAME SS509474

SIZE B
DRAWING NO SS509474
REV 9