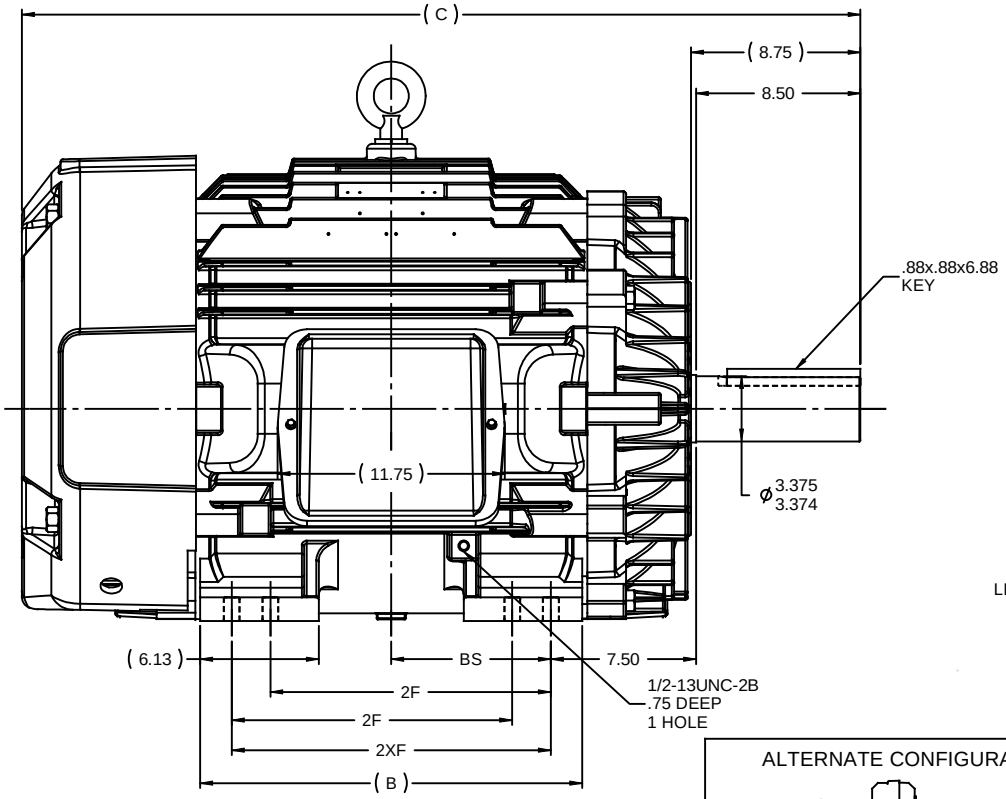

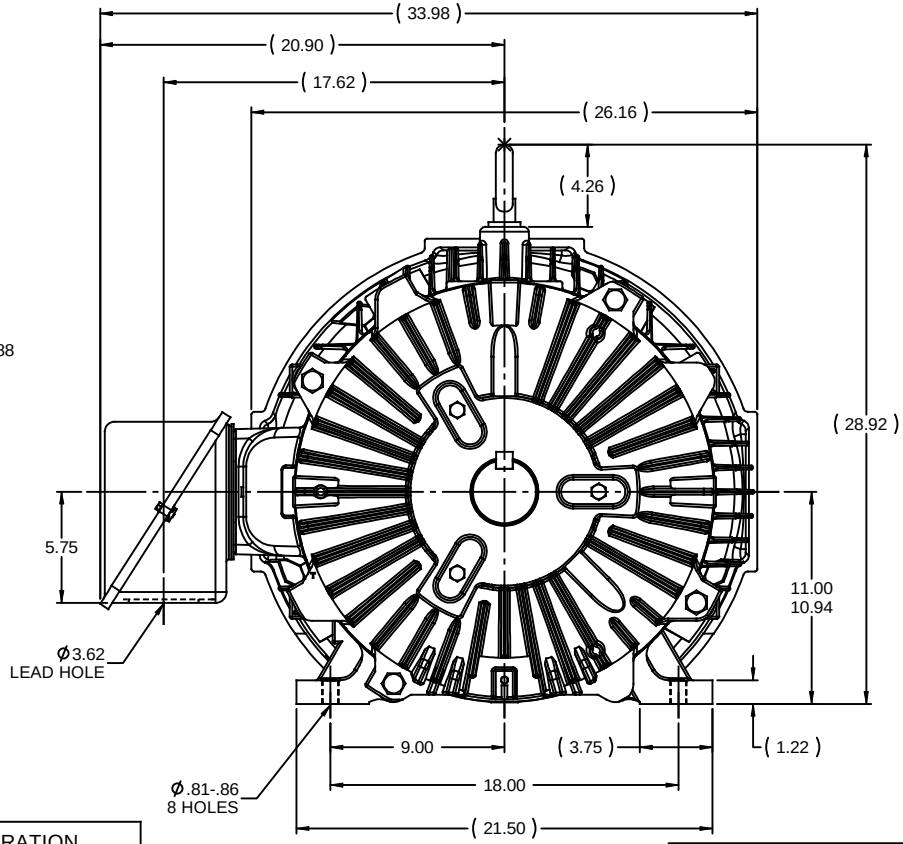

ALTERNATE CONFIGURATION

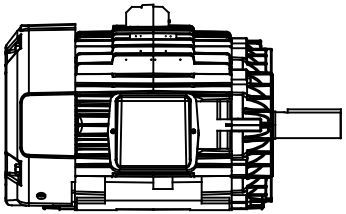

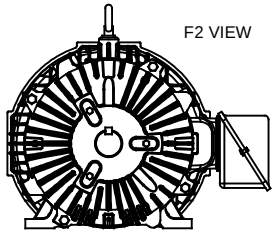

NOTES:
1. CONDUIT BOX CAN BE ROTATED IN 90° STEPS.
2. CONDUIT BOX CAN BE MOUNTED ON OPPOSITE SIDE BY REMOVING BRACKETS AND TURNING FRAME 180°
3. NAMEPLATES TO BE READ FROM CONDUIT BOX SIDE OF MOTOR.

DASH	FRAME	B	C	BS	2F	2XF	
1825	444T	17.75	41.35	7.25	14.50	---	
2025	444/445T	19.75	43.35	8.25	14.50	16.50	

NO	REVISION	BY & DATE	CHK
13	ADDED ALTERNATE CONFIGURATION PER ISAAC 09-5049	JJB 1/5/2010	
12	REVISED DASH TABLE ISAAC09-5199	TJW 12/10/2009	CTO
11	UPDATED FRAME AND DASH TABLE PER MU90793	JJB 4/16/2009	MH
10	UPDATED DRAWING	RJW 4/17/2007	
9	CHG CAN GUARD & REV C-DIM PER CN39335	RWR 1/22/2007	ML
8	REDRAWN IN AUTOCAD	TAT 6/29/2004	ML

TOLERANCES UNLESS SPECIFIED

DEC	INCHES
.X	±.1
.XX	±.03
.XXX	±.005
.XXXX	±.0005
ANG	±7'30"

MARATHON ELECTRIC

TITLE OUTLINE - TEFC
444-445T FR. - STD

MAT'L
FINISH

DRAWN DA 12/28/1990
CHK JL 1/3/1991
APPR ML 1/3/1991
SCALE 5:32
REF
FMF
PAGE OF

THIRD ANGLE PROJECTION

RFP
PREV
NETWORK FILE NAME SS513898

SIZE B
DRAWING NO SS513898
REV 13

1/5/2010 2:53:11 PM