169550–60ME

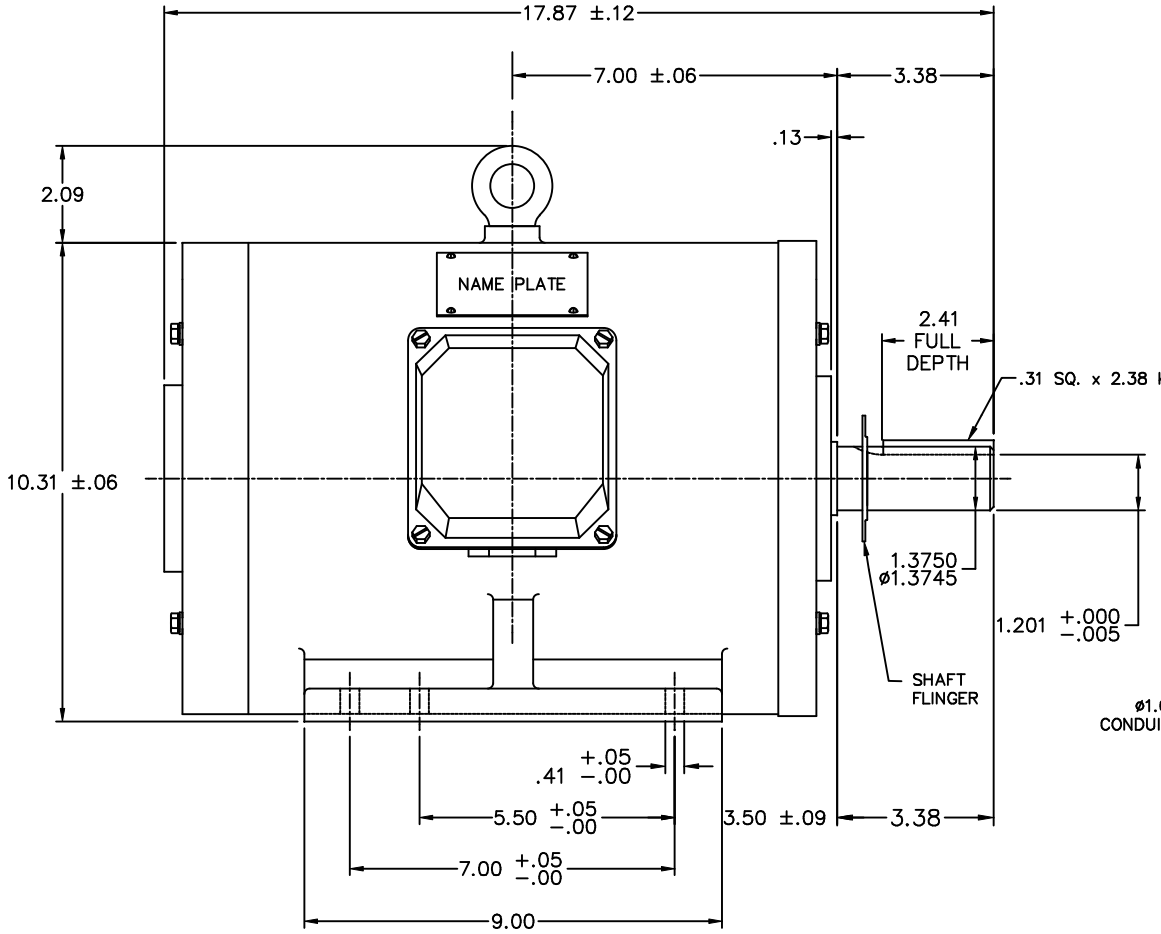

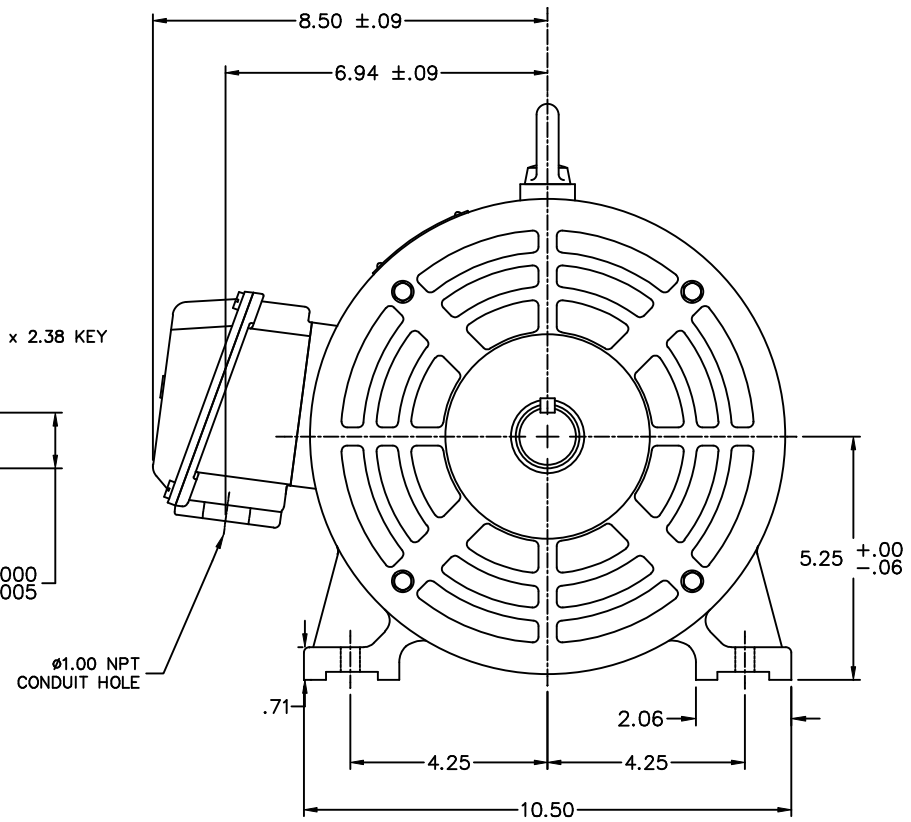

				TOLERANCES UNLESS SPECIFIED		MARATHON ELECTRIC	DRAWN CTO 04–23–2002
				DEC.	INCHES		CHK ML 05–20–2002
				.X	±.1		APPD SB 05–21–2002
				.XX	±.03	TITLE OUTLINE – 215T FRAME	SCALE 1=1
				.XXX	±.005	ODP, RIGID MOUNT, NEW CON–BOX	REF 169515
1	NEW DRAWING	CTO 04/23/02		.XXXX	±.0005	MAT'L.	FMF
NO.	REVISION	BY & DATE	CHK	ANG	±1/2°	FINISH	PREV

THIS DRAWING IN DESIGN AND DETAIL IS OUR PROPERTY AND MUST NOT BE USED EXCEPT IN CONNECTION WITH OUR WORK ALL RIGHTS OF DESIGN AND INVENTION ARE RESERVED
THIS IS AN ELECTRONICALLY GENERATED DOCUMENT – DO NOT SCALE THIS PRINT

RFP
DIST

CAD FILE 16955060me

SIZE	DRAWING NO.	REV.
B	169550–60ME	1