Uncontrolled Copy

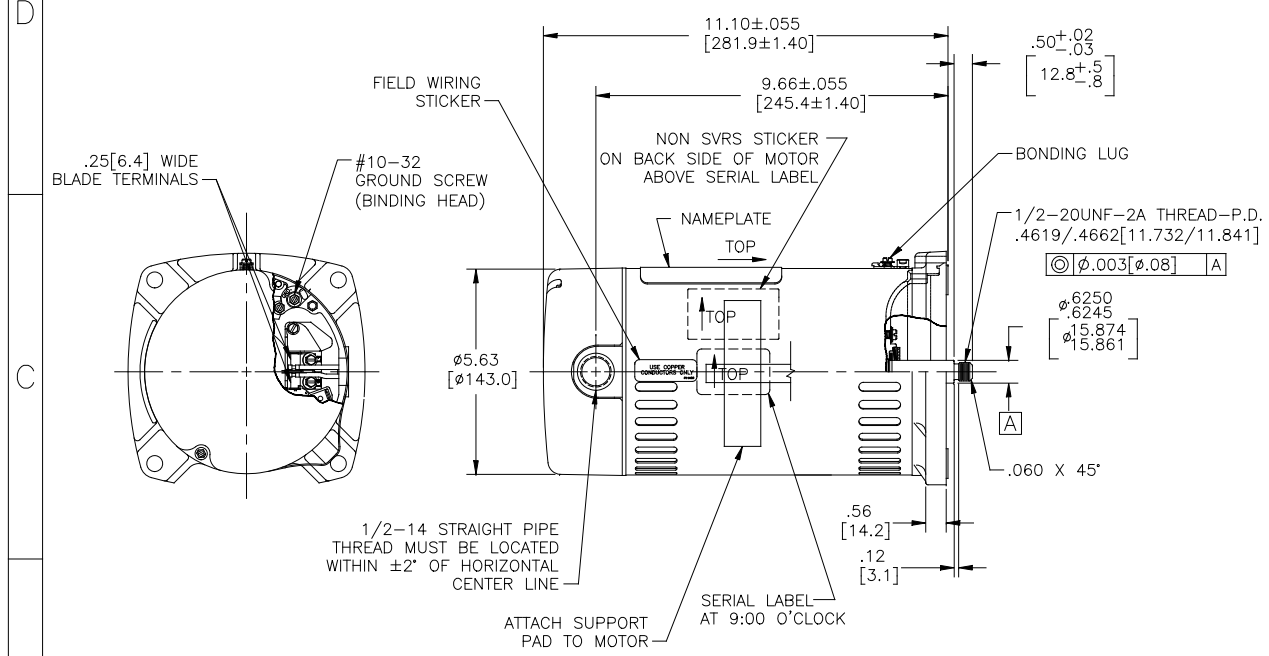

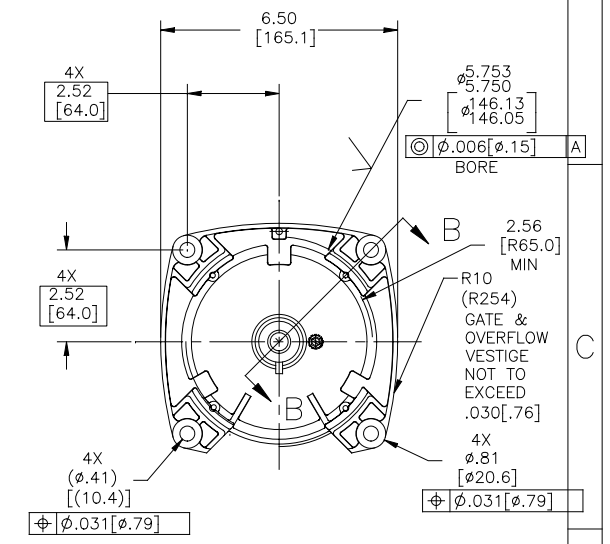

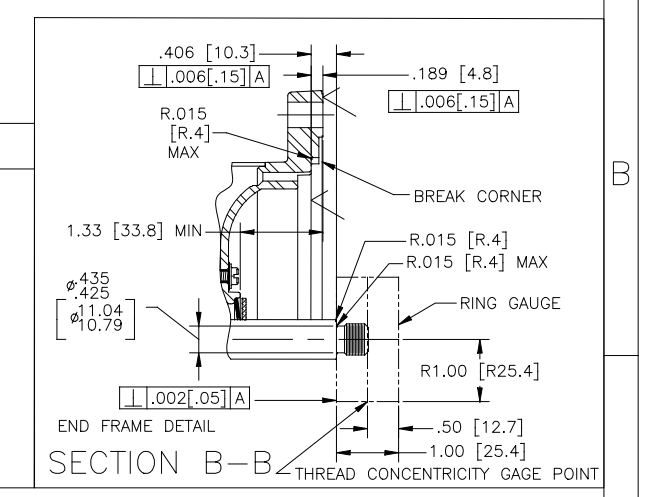

NAMEPLATE DATA

MODEL: C48H2PA105C5
CUST PN: USQ1052
HP: 0.5 SF: 1.3
ROT: CCWPE
RPM: 3450
TYPE: UAC CODE: K
FORM: FRAME: 48 Y
VOLTS: 230/115
AMPS:
MAX AMPS: 5.0/9.9
SF AMPS: –
PH: 1 HZ: 60
INS: B AMB: 50°C
DUTY: CONT
ENCLOSURE: ODP
THERMALLY PROTECTED

EXTERNAL CONNECTION DIAGRAM

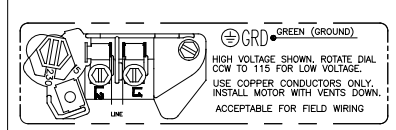

NOTES

1. FINISH PAINT TO BE SATIN BLACK.
2. .44[11.2] WRENCH FLATS ON SHAFT–FOR ACCESS TO THIS WRENCH FLAT REMOVE END COVER.
3. STAINLESS STEEL SHAFT EXT.
4. LIMITS ON AMPLITUDE OF VIBRATION MEASURED AT BEARING HOUSING = .001.
5. CONNECTED FOR 230 VOLTS. QUICK VOLTAGE CHANGE DIAL INCLUDED ON THE TERMINAL BOARD.

PERFORMANCE CURVE		APPROVED SAMPLE	
C48H2W46			
UL COMPONENT		CSA	
FILE#	CCN#	FILE#	GUIDE#
E25022	XEWR2	LR43341	4211−01
CUSTOMER	DISTRIBUTION SERVICES		

DRAWING REVISION	REVISION BY	DATE
D	F.NAVARRO	09−27−2016
ECO	APPROVED BY	DATE
ECO−0109446	–	–
ECO DESCRIPTION		
SEE ECO		

COPYRIGHT REGAL BELOIT AMERICA, INC. ALL RIGHTS RESERVED.
PROPRIETARY AND CONFIDENTIAL INFORMATION – THIS DOCUMENT IS THE PROPERTY OF REGAL BELOIT AMERICA, INC. ("OWNER") AND CONTAINS OWNER'S PROPRIETARY INFORMATION. ANY PERSON, CORPORATION OR OTHER FIRM RECEIVING IT IS DEEMED, BY RECEIVING IT, TO AGREE THAT IT, AND/OR ANY PART OF IT, SHALL NOT BE DISCLOSED TO ANY PERSON, CORPORATION OR OTHER ENTITY, DUPLICATED, AND/OR USED, EXCEPT AS EXPRESSLY PERMITTED IN WRITING BY OWNER. ALL RIGHTS ARE RESERVED. SHALL BE RETURNED TO OWNER UPON REQUEST. IT MAY BE SUBJECT TO CERTAIN RESTRICTIONS UNDER APPLICABLE EXPORT CONTROL LAWS AND REGULATIONS.

TOLERANCES UNLESS OTHERWISE SPECIFIED

DEC.	INCH	mm	ANGLE
.X	±0.1	[±2.5]	±0.5°
.XX	±0.02	[±0.51]	
.XXX	±0.005	[±0.127]	
.XXXX	±0.0005	[±0.0127]	

REMOVE BURRS & BREAK SHARP EDGES .003/.015 [.076/.381]
CORNER FILLETS .02 [.51]
MACHINED SURFACES 125/ INCH 3.2/ mm
mm SHOWN IN [BRACKETS]

DRAWN BY: JLG
DATE: 05−12−2009
APPROVED BY:
DATE:
REFERENCE

THIRD ANGLE PROJECTION

Regal Beloit America, Inc.

DESCRIPTION
MODEL−PFHP−48FR
OUTLINE

MATERIAL | PROCESS/FINISH

SIZE C | DWG NO USQ1052 | SHEET 1