12LYS033

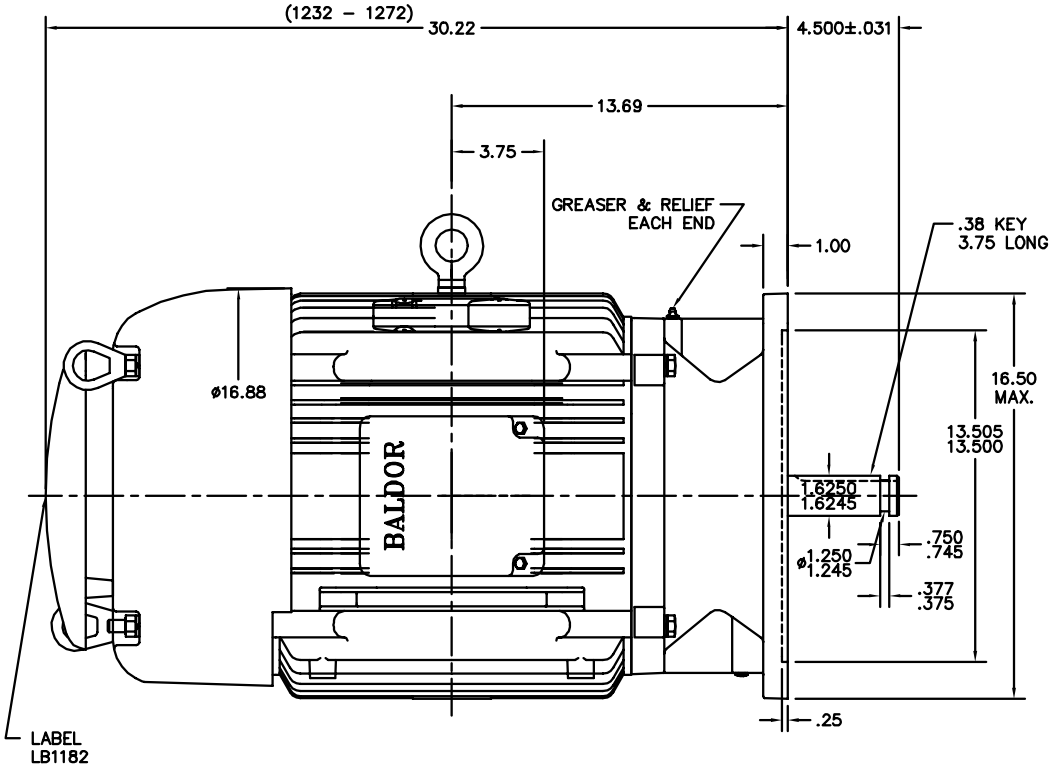

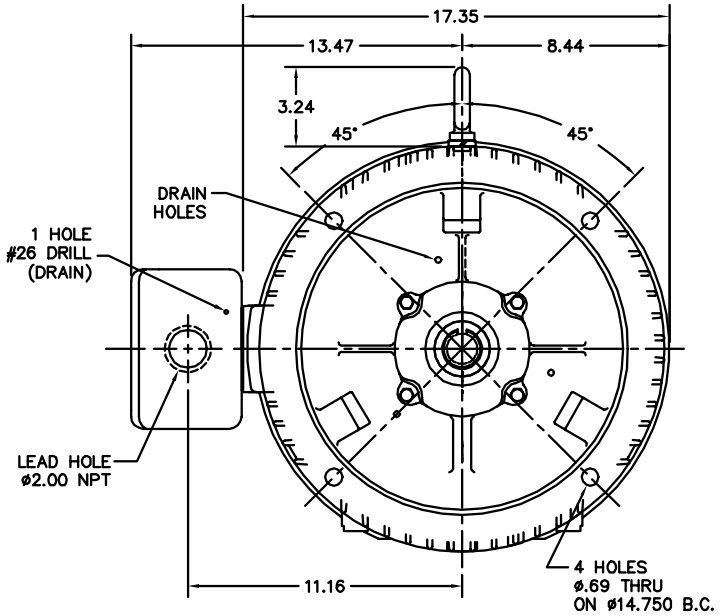

CUSTOMER IS RESPONSIBLE FOR DETERMINING THAT BALDOR'S PRODUCT WILL PERFORM SUITABLY IN THE INTENDED APPLICATION.

REV. DESC: STANDARDIZE DIMENSIONS FOR CATALOG P–BASE MOTORS			BALDOR • DODGE • RELIANCE
REV. LTR: C	VERSION: 01	TDR: 000000497013	
FILE: \AAA\00069\136	REVISED: 10:02:28 04/15/2009	BY: ENDANDO	VER TEFC 324–6HP ECP; 312 PU BRG
MTL: –			SH 1 of 1

12LYS033