07LYL641

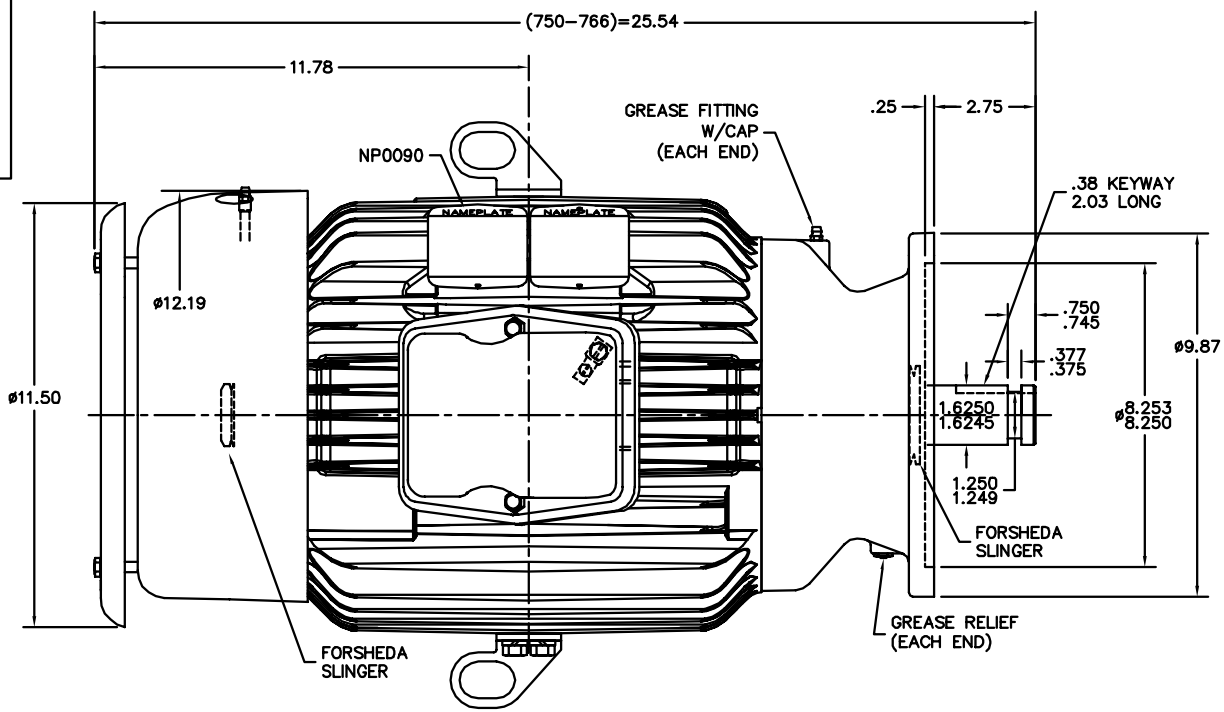

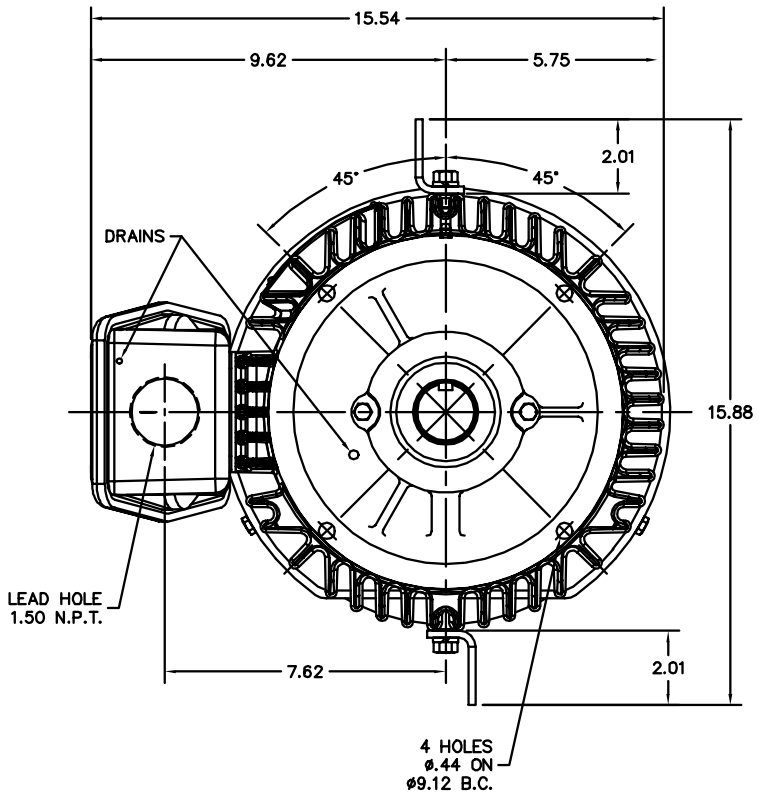

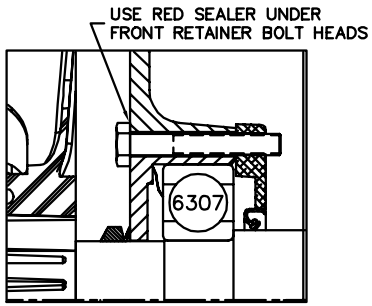

FRONT END DETAIL

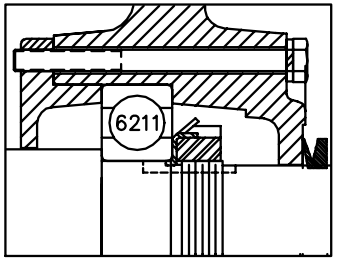

PULLEY END DETAIL

CUSTOMER IS RESPONSIBLE FOR DETERMINING THAT BALDOR'S PRODUCT WILL PERFORM SUITABLY IN THE INTENDED APPLICATION.

REV. DESC: NEW, SAME AS 07K417 BUT WITH 1.625 DIA. SHAFT			BALDOR
REV. LTR: –	VERSION: 00	TDR: 000000563037	
FILE: \AAA\00176\328	REVISED: 08:59:51 10/20/2010	BY: ENJAMM1	VERT 254-6LP TEFC 307M CP W/DRIP COVER, LARGE KOBX
MTL: –			SH 1 of 1

07LYL641