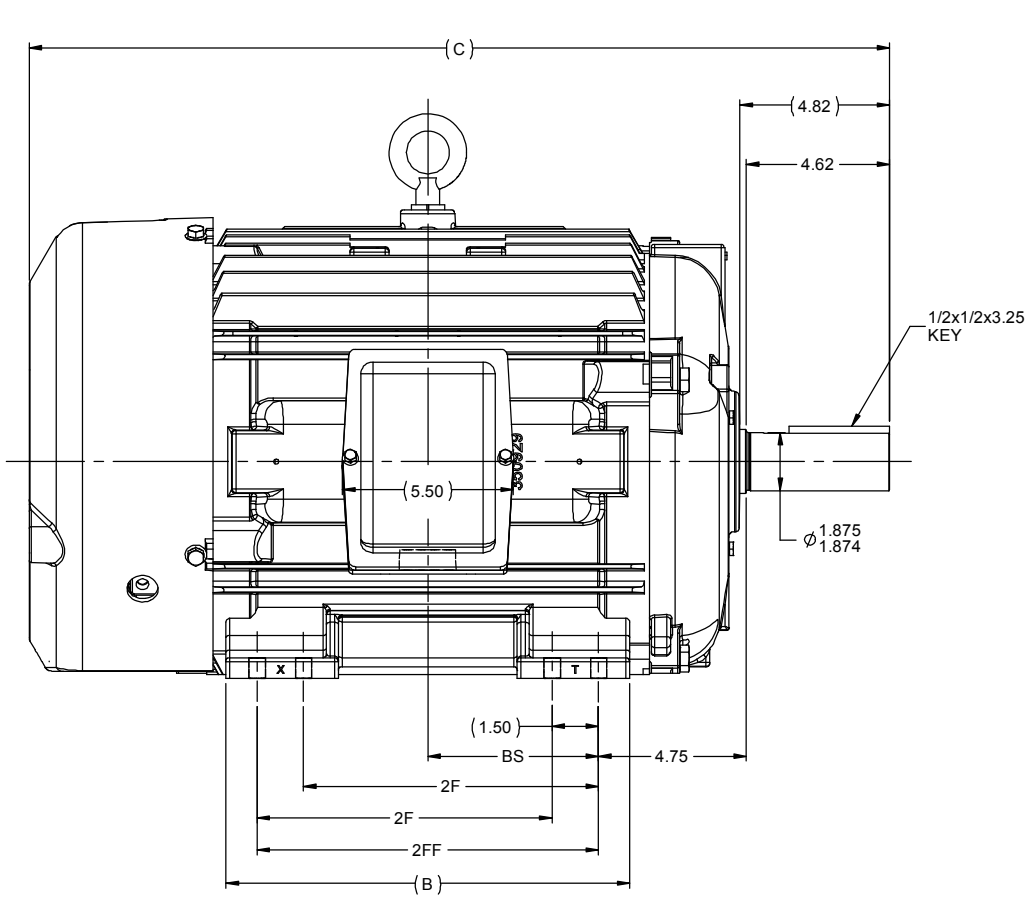

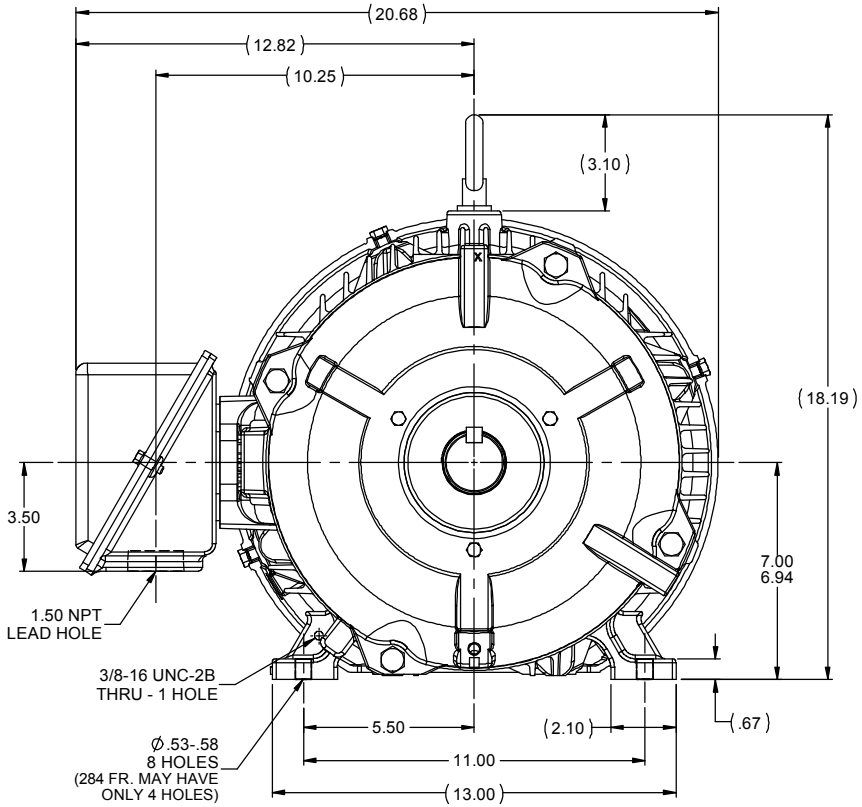

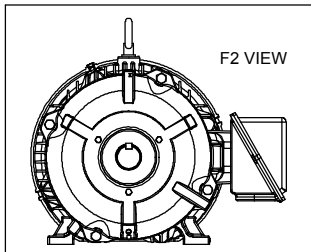

NOTES:
1. CONDUIT BOX CAN BE ROTATED UP TO 270° FROM ITS ORIGINAL POSITION.
2. CONDUIT BOX CAN BE MOUNTED ON OPPOSITE SIDE BY REMOVING BRACKETS AND TURNING FRAME 180 °.
3. NAMEPLATE TO BE READ FROM CONDUIT BOX SIDE OF MOTOR.

DASH	FRAME	C	B	2F	2FF	BS
1275	284T	26.21	12.50	9.50	- - -	4.75
1425	284/286T	27.71	13.00	9.50	11.00	5.50

NO	REVISION	BY & DATE	CHK
4	UPDATED TO NEW FRAME DESIGN MU106205	MSG 08-22-2012	MSG
3	REDRAWN IN AUTOCAD - NO CHANGE	TAT 06-29-2004	ML
2	ADDED NOTE 3 MU35810	DAH 02-06-2001	ML
1	NEW DRAWING MU34031	MSG 08-23-2012	ML

TOLERANCES UNLESS SPECIFIED

DEC	INCHES
X	±.1
XX	±.03
XXX	±.005
XXXX	±.0005
ANG	±1/2°

marathon electric

TITLE OUTLINE - TEFC - TGN
280T FR. - BB - STD - 12.50 LAM.

MAT'L
FINISH

THIRD ANGLE PROJECTION

RFP 10-18-2000
NETWORK FILE NAME SS311057
PREV

DRAWN	CAV 10-18-2000
CHK	ML 10-18-2000
APPR	BW 10-18-2000
SCALE	1:4
REF	
FMF	MU34031
PAGE	OF

SIZE B
DRAWING NO SS311057
REV 4

8/23/2012 8:47:55 AM - Converted by Connexus