Uncontrolled Copy

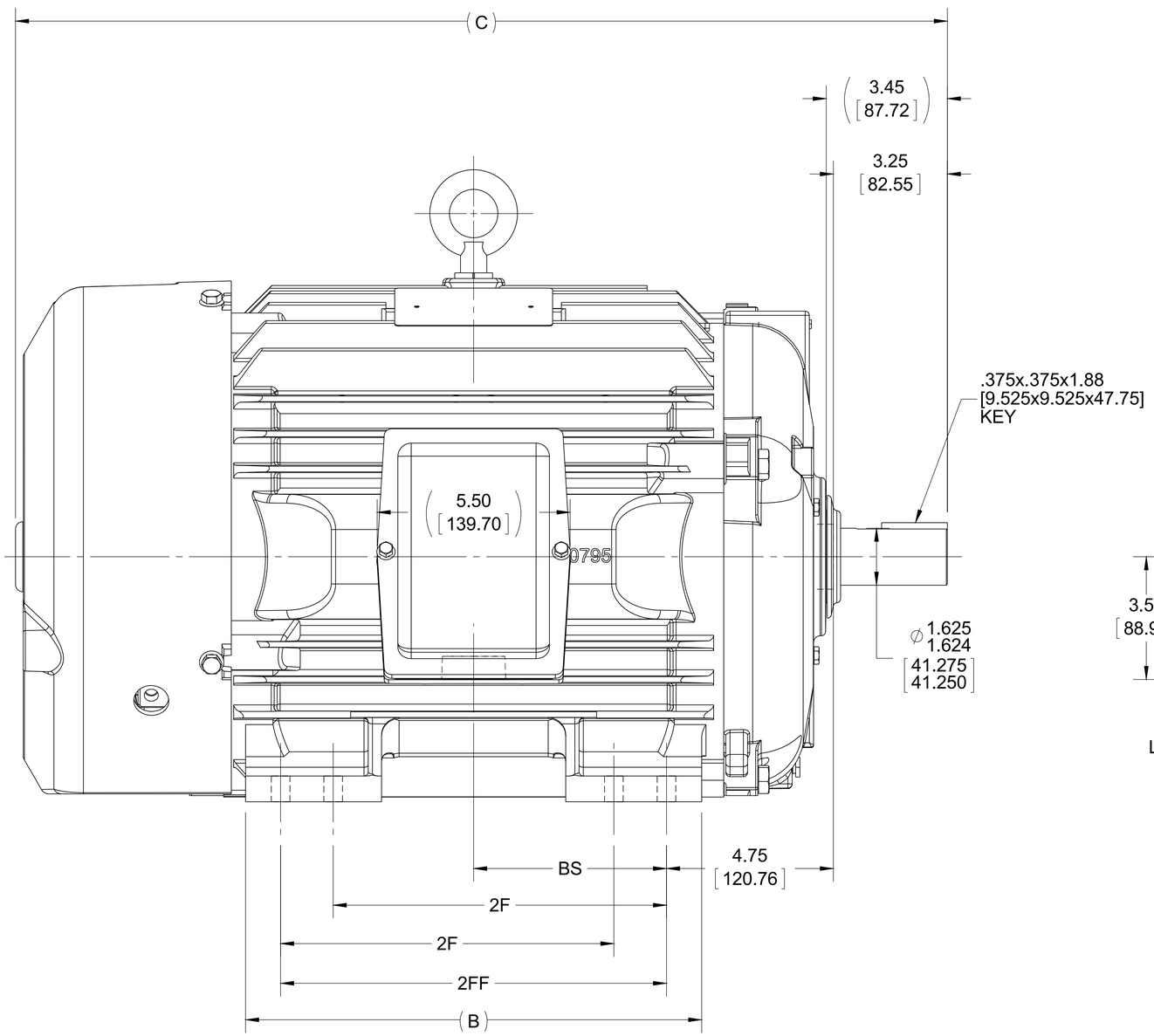

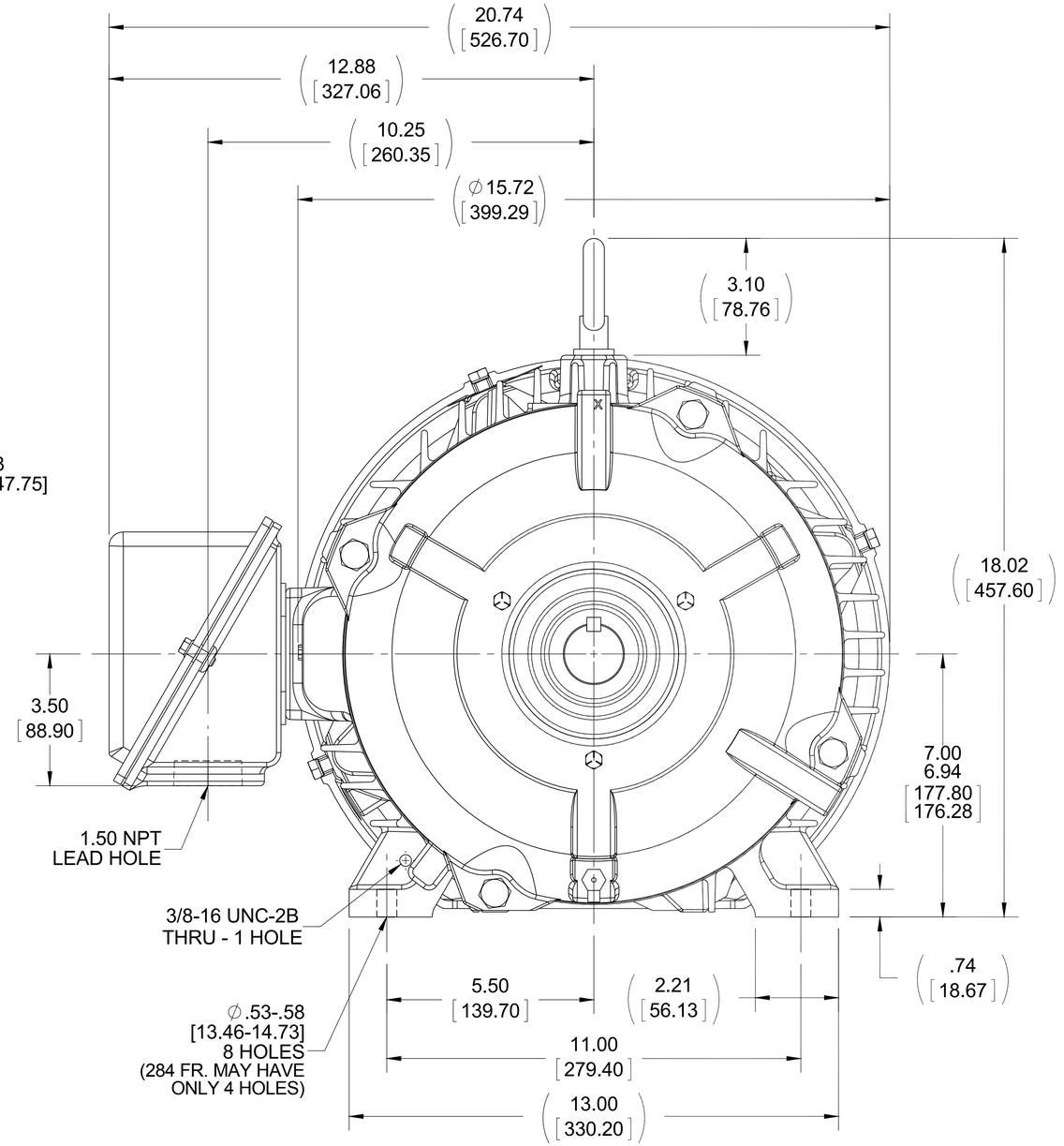

NOTES:
1. CONDUIT BOX CAN ONLY BE ROTATED CLOCKWISE UP TO 270° FROM ITS ORIGINAL POSITION.
2. CONDUIT BOX CAN BE MOUNTED ON OPPOSITE SIDE BY REMOVING BRACKETS AND TURNING FRAME 180°.
3. NAMEPLATE READ FROM CONDUIT BOX SIDE OF MOTOR.

DASH	FRAME	C	B	2F	2FF	BS
1275	284TS	25.06 [636.53]	12.50 [317.50]	- - -	9.50 [241.30]	4.75 [120.65]
1425	284/286TS	26.56 [674.61]	13.00 [330.20]	9.50 [241.30]	11.00 [279.40]	5.50 [139.64]

DRAWING REVISION	REVISION BY	DATE
F	MSG	11-10-2015
ECO: ECO-0088479	APPROVED BY: TVUE	DATE: 11-11-2015

ECO DESCRIPTION: UPDATED TO CURRENT STANDARDS

COPYRIGHT REGAL BELOIT AMERICA, INC. ALL RIGHTS RESERVED.
PROPRIETARY AND CONFIDENTIAL INFORMATION - THIS DOCUMENT IS THE PROPERTY OF REGAL BELOIT AMERICA, INC. ("OWNER") AND CONTAINS OWNER'S PROPRIETARY INFORMATION. ANY PERSON, CORPORATION OR OTHER FIRM RECEIVING IT IS DEEMED, BY RECEIVING IT, TO AGREE THAT IT, AND/OR ANY PART OF IT, SHALL NOT BE DISCLOSED TO ANY PERSON, CORPORATION OR OTHER ENTITY, DUPLICATED, AND/OR USED, EXCEPT AS EXPRESSLY APPROVED IN WRITING IN ADVANCE BY OWNER. THIS DOCUMENT SHALL BE RETURNED TO OWNER UPON REQUEST. IT MAY BE SUBJECT TO CERTAIN RESTRICTIONS UNDER APPLICABLE EXPORT CONTROL LAWS AND REGULATIONS.

TOLERANCES UNLESS OTHERWISE SPECIFIED:

DEC.	INCH	mm	ANGLE
.X	±0.1	[±2.5]	±7' 30"
.XX	±0.03	[±0.76]	
.XXX	±0.005	[±0.127]	
.XXXX	±0.0005	[±0.0127]	

REMOVE BURRS & BREAK SHARP EDGES: .003/.015 [.076/.381] X 45°
CORNER FILLETS: R.02 [.51]
MACHINED SURFACES: 200 INCH / 5.1 mm
mm SHOWN IN [BRACKETS]

DRAWN BY: DAH
DATE: 04-02-2001
APPROVED BY: ML
DATE: 04-02-2001
REFERENCE:
THIRD ANGLE PROJECTION

REGAL™ Regal Beloit America, Inc.

DESCRIPTION: OUTLINE
280TS FR. - TEFC - STD. - 12.50 LAM

MATERIAL:
PROCESS/FINISH:
SIZE: B
DRAWING NUMBER: SS311136
SHEET: 1 OF 1